Critically coupled antennas

By Phil Harman, VK6APH/G3WXO

Perhaps the hottest and most controversial antenna topic of the moment is that of 'critical coupling'. First used by **Fred Caton, VK2ABQ**, over 20 years ago in his world-famous two-element Yagi design[1], the principle was initially slow to be adopted by most other antenna designers. However, in the last year or so, a new generation of HF and VHF antennas has emerged using critical coupling — resulting in beams with short booms, wide SWR bandwidth, excellent front-to-back ratios and high claimed forward gains.

Here in Australia, the most visible of these antennas is probably the range of log Yagis using critical coupling designed by John Thomas, VK2AU, and now produced commercially by VK6XH at Antenna West. The 20 metre version features an 11 foot boom, 30dB front-to-back ratio and a claimed 11dBd forward gain.

These log Yagi antennas were recently described in an article in *Amateur Radio Action* by Steve Ireland, VK6VZ[2].

There are also a number of amateurs like myself using home-made antennas based on designs by Les Moxon, G6XN, an antenna genius with a long time interest in critical coupling. This is essentially a two-element delta loop beam with critically-coupled elements, capable of working on *all* the amateur bands between 10 and 30MHz. Once again, the emphasis is on a short boom, high front-to-back ratio and relatively high gain.

Before looking at these latter designs in more detail — and at my own development of G6XN's 'Small Delta Loop' (SDL) antenna — let's see exactly what *is* critical coupling and how it is incorporated into a beam antenna.

Coupling up

You may be familiar with the term 'critical coupling' when it is applied to tuned circuits. In this case, critical coupling occurs when two tuned circuits are coupled together in such a way that the same value of current flows in each one (**Figure 1**, below).

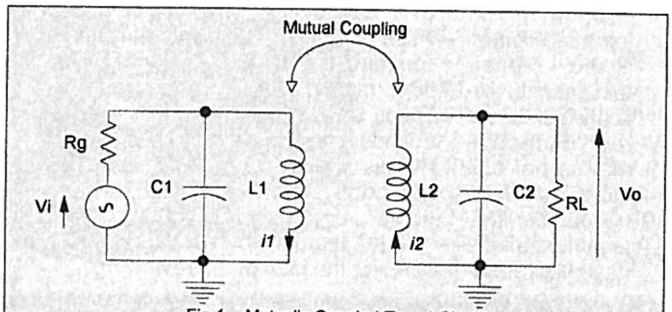

Fig.1 Mutually Coupled Tuned Circuits

Let's get slightly mathematical for a moment. Don't worry, it's only for a moment and it is quite helpful.

The simplest way to achieve this is to place the two coils in close physical proximity, so that the magnetic flux generated by L1 is also felt by L2. Varying the distance between the two coils varies the amount of flux felt by L2 and hence the current flowing in it.

If the distance between the coils is adjusted so that the two currents are equal, they are said to be 'critically-coupled'. Coupling between the coils is also referred to by the coupling coefficient, k, and is unity when the coupling is critical, ie $k = i2/i1 = 1$.

Reducing the coupling between the coils such that $k < 1$ results in $i2$ being less than $i1$, similarly increasing the coupling such that $k > 1$ can cause $i2$ to be greater that $i1$.

In this example, the coupling between the coils is caused by them sharing a common, or 'mutual', magnetic field. Hence we refer in radio and electronics to mutual coupling or mutual inductance, when two coils or pieces of wire share the same magnetic field.

It is 'mutual coupling' between the driven element of a conventional Yagi beam and its reflector and director elements that causes RF currents to flow in them.

Sometimes it is not possible, or practical, to use mutual inductance to critically-couple two coils together — the individual coils could be enclosed in screening cans, for example.

An alternative way to obtain critical coupling is to connect the two coils together using a capacitor — see **Figure 2**.

In practice, a small variable capacitor would be used, so it can be adjusted to obtain $k = 1$. For obvious reasons, this technique is called capacitive coupling.

Yet another way to obtain critical coupling would be to 'drive' both coils from the same voltage source — see **Figure 3**. By adjusting the amplitude and phase of the source we could again set $k = 1$.

This third method is not often applied to coils, but is introduced here so we can use it when discussing dual-driven Yagis using critical coupling, in due course.

The whole idea is to use our coupled coil theoretical discussions as an analogy to understand the operation of antennas based on critical coupling. Remember we have applied mutual, capacitive and driven coupling as a way of making $k = 1$.

Why critical coupling?

Let's now look at the reasons we would wish to apply the critical coupling technique to an antenna. If we adjust the coupling between a conventional two-element beam — see **Figure 4** — so that the current flowing in each element is equal (ie $k = 1$) and the phase of the currents is adjusted to a specified value then we obtain an antenna with:

- theoretically infinite front-to-back ratio (in practice over 30dB is easily achievable);
- 'guaranteed' forward gain of 5.3dBd (verifiable by measuring the direction of rear nulls in the antenna pattern);
- feed impedance suitable for direct connection to a coaxial feeder;
- the ability to 'steer' the direction of the deep nulls at the rear of the antenna, allowing reduction/elimination of interference and noise. This is achieved by adjusting the relative phase of the currents in the elements. These deep steerable nulls are available for *all* signals arriving at the rear of the antenna, irrespective of the angle of their arrival.

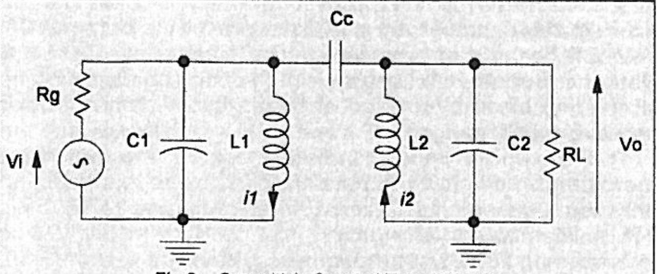

Fig.2 Capacitivly Coupled Tuned Circuits

Fig.3 Dual-Driven Tuned Circuits

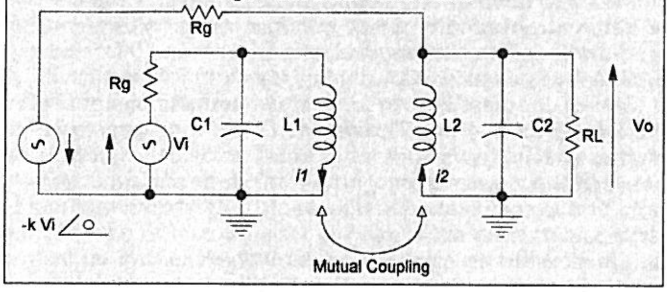

The performance of the beam is dependant upon both k and the relative phase angle of the currents in the two elements. For infinite front-to-back ratio with k = 1, the relative phase of the currents is given by: **180 - (d X 360) degrees**, where d is equal to the distance between the elements as a fraction of a wavelength and one wavelength = 360 degrees. For example, for a beam with two elements spaced 1/8 wavelength, and k = 1 (ie critically-coupled), the relative phase would be:

180 - (1/8 X 360) = 180 - 45 = 135 degrees

In a conventional two-element beam (ie mutually-coupled elements) the desired phase relationship is obtained by either making one element slightly longer (reflector), or shorter (director) than the driven element. The coupling between the elements is dependant upon the physical spacing between the elements, typically 1/8 wavelength.

Most antenna handbooks will show the effect on forward gain on a two-element Yagi as the spacing between the elements is changed. As can be seen from **Figure 5**, 1/8 wavelength represents a good compromise between gain and boom length of the antenna.

Unfortunately, this spacing does *not* allow us to obtain equal currents in each element and therefore the desirable characteristics of critically-coupled antennas.

In order to increase the current in the reflector, it is necessary to reduce the distance between the elements — unfortunately also reducing the antenna's forward gain and lowering the feed impedance!

It turns out that we need very close spacing with mutual inductive coupling in order to obtain critical coupling.

However, problems with antenna efficiency and bandwidth then emerge. Let's use one of the other tuned circuit solutions — capacitive coupling — to overcome this problem.

Coupling and VK2ABQ

Capacitive critical coupling of two-element beams appears to have been first developed by VK2ABQ for his two-element array mentioned earlier — a lightweight, moderate gain antenna with very high front-to-back ratio. In its simplest form, the VK2ABQ array resembles a quad loop laid flat, with an insulator placed in the middle of each side — see **Figure 6**. Imagine the antenna as two half-wave dipoles with their ends bent back towards each other, thus increasing the coupling between them. Varying the length of the insulators in two of the sides of the antenna allows the capacitive coupling between the elements to be adjusted.

In practice, the distance between the elements — and hence the capacitive coupling — tends to be fairly critical and must be carefully adjusted. However, a forward gain of 4dBd and front-to-back ratio of better than 30 dB can be obtained with a VK2ABQ antenna

Unlike a conventional parasitic beam, the reflector is the same length as the driven element and is therefore resonant at the same frequency. This is due to the capacitive coupling between the ends of the elements, providing both the required phase shift, and the ability to set k = 1, without the usual requirement to lengthen the reflector.

This feature can be used to advantage when constructing the antenna, since each element can be trimmed to resonance with the other detuned (by folding the ends back on themselves). The capacitive coupling (ie spacing) between the elements is then adjusted to produce a pronounced null on a signal coming from the back of the antenna.

The VK2ABQ antenna can be tuned at a height of about 10 feet above the ground, using either another local radio amateur's signal or a signal generator. In both cases, the test signal must come from a horizontally-polarised antenna spaced at least three wavelengths away.

Whilst the VK2ABQ beam is a good performer, it is not quite optimal in terms of forward gain. As we can see from **Figure 5**, a two-element beam with a spacing of 1/4 wavelength like the VK2ABQ will have a theoretical forward gain of 4dBd — and reducing the spacing to 1/8 wavelength will increase the gain to 5.3dBd.

... ☞

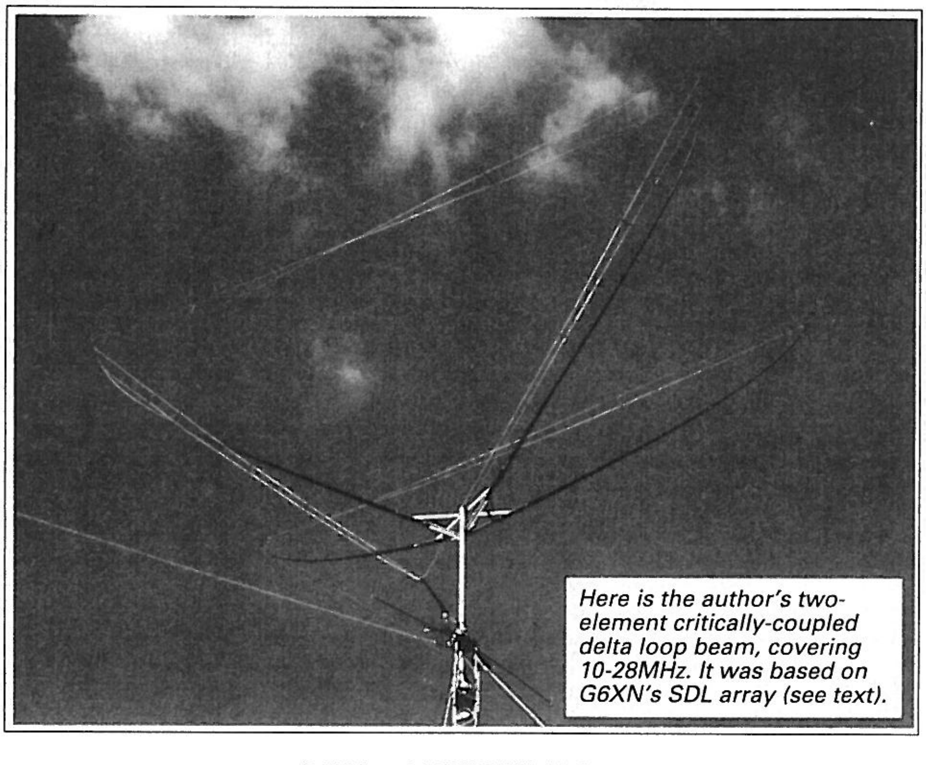

Here is the author's two-element critically-coupled delta loop beam, covering 10-28MHz. It was based on G6XN's SDL array (see text).

Fig.4 Two Element Beam

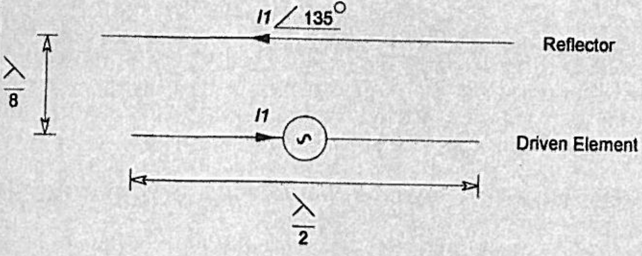

Fig.5 Variation of gain with element spacing

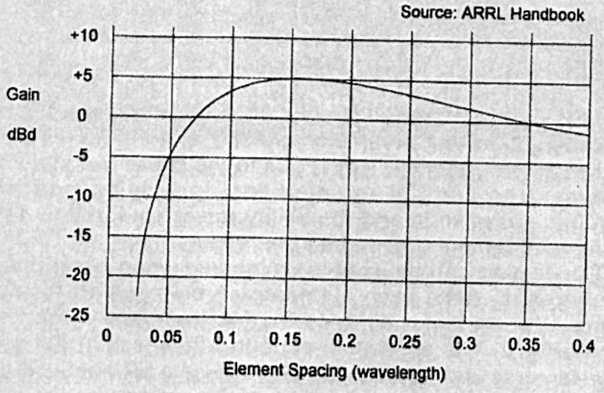

Fig.6 Original VK2ABQ design 2 element beam

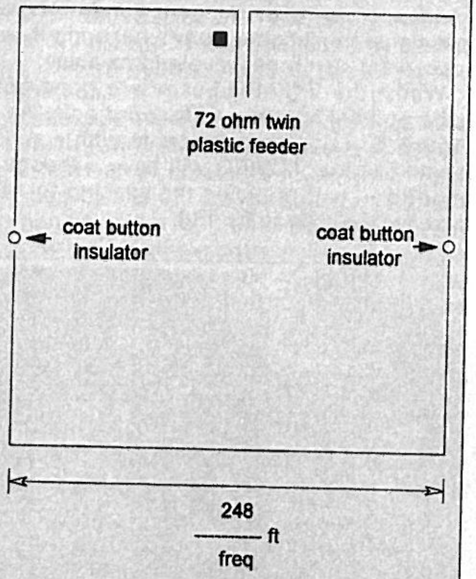

Fig.7 G6XN Improvements to the VK2ABQ (20M Version)

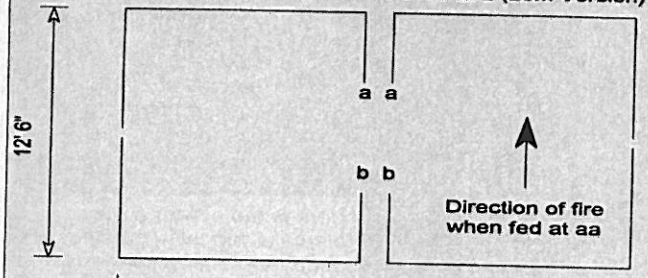

Feed at either aa or bb with 75 ohm twin feeder

Fortunately, as G6XN discovered, all that is necessary to achieve this increase in gain is to alter the shape of the VK2ABQ beam from a square to an oblong — see **Figure 7**. Note that a multi-band beam version of the antenna can be simply produced by nesting elements in the same manner as a cubical quad.

This method of multi-banding is not recommended for more than a few of the HF amateur bands, due to interaction between the elements. Fitting 28MHz traps in the VK2ABQ's 21MHz elements to prevent current flowing in them when operating on 28MHz has proved successful.

Capacitive critically-coupled antennas can also be constructed from other than U-shaped elements — in fact *any* shape other than straight can be used! **Figure 8** shows a number of possible element configurations which can be recommended to the antenna experimenter. References [3] and [4] refer to other configurations which are of interest.

One of the best known 'capacitive-coupled' antennas is the two-element quad. The nature of the loop construction of the quad allows for substantial capacitive coupling between the elements, accounting for the high front-to-back ratio and non-critical adjustment — the best-known characteristics of this antenna.

It is possible to convert the cubical quad to a critically-coupled beam by increasing the coupling between the loops (capacitive coupling) or driving both loops ie providing two feeders. This latter configuration allows the reflector to be remotely tuned for optimum gain or front-to-back ratio and, via a suitable switching arrangement, gives instantaneous beam reversal.

My friend VK6VZ has been using a critical-coupled quad configured in this manner on 20 metres for the last six months to keep regular schedules with his father in the UK, switching the antenna between the short and long paths to Europe depending on conditions.

Changing tack

Let us now leave capacitive critically-coupled antennas for the present. Before we turn to the fascinating driven designs, a brief look at inductive coupling is rewarding...

As I've already said, it is not possible to obtain critical coupling with two conventional straight elements spaced 1/8 wavelength apart. However, bringing the ends of the elements together, in the manner of the VK2ABQ antenna, to increase the capacitance will enable us to set k = 1.

Similarly, bringing the center sections of the two elements together increases the mutual inductance and enables the element currents to be equalised. The simplest arrangement is shown in **Figure 9**, where V-shaped elements are used, and has practical applications where very short antenna booms are required.

Driven beams

By far the longest-standing group of critically-coupled antennas are those where both elements are driven. It is rather unfortunate that this type of beam antenna has for many years been rather neglected.

The reason for this is quite simple: the principle of operation of dual-driven arrays appears to have been incorrectly reported for years. Not only that but, in my experience, antennas based on this principle — for example the famous 'ZL Special' and W8JK antennas, regrettably don't work as well as expected. The accepted theory of operation of these antennas is quite simple, but, I believe, fundamentally flawed.

Let us look at a typical 'text-book' two-element dual-driven beam — the ZL-Special. Two elements are spaced 1/8 wavelength apart to form the two-element beam. In order to obtain equal currents in each element, with the correct phase angle, the elements are connected via a length of twin feeder. See **Figure 10**.

From our previous work we know that the phase angle between the two currents needs to be (180 minus the electrical distance between elements) degrees; which for 1/8 wavelength spacing, equals 135 degrees. We also know that a length of transmission line has a phase shift along it, such that one wavelength of line has a 360 degree shift, 1/2 wavelength has a 180 degree shift, and so on.

Following the text books, in order to obtain the required 135 degrees phase shift, we connect the elements together via a 1/8 wavelength of twin feeder, with a twist in the middle. Unfortunately this arrangement will not give us the required coupling or phase angle for the following reasons:

1. The phase shift along a length of feeder is indeed 360 degrees per wavelength, but *only* if the feeder is terminated in its characteristic impedance. As we will see shortly, this is most certainly *not* the case for this particular antenna.

2. The analysis ignores the mutual coupling which already exists between the elements.

For example, in the ZL-Special, this mutual coupling can result in the reflector actually having a *negative* resistive feedpoint component. Connecting separate feeders to each element (without the phasing line), and placing an SWR meter in the reflector feeder will cause the meter to indicate a reversal in the direction of power flow, as the reflector is tuned through resonance.

Until now[5], the lack of any reference to this phenomenon in any of the radio 'textbooks' suggests to me that any antenna experimenters who may have come across it in the past probably thought their instruments were malfunctioning and kept quiet about it!

However, modern computerised antenna analysis programs, such as ELNEC and MININEC, can clearly show that the reflector of the ZL-Special beam really has a 'negative' resistive component. There is no real mystery here; the negative component simply indicates that the reflector is returning power to the source (ie the driven element), rather than receiving power from it.

This knocks on the head the ZL Special, W8JK and a number of other beam antennas that rely on an *unmatched* phasing line to provide the required phase difference between elements. In fact, many of these antennas do work after a fashion, but as parasitically-excited beams, since the mismatch presented to the phasing line means little, if any, current flows in it and hence all the advantages of critical coupling are foregone.

Note that this criticism of phasing lines does not apply to beam antennas using matched feeders/phasing lines — for example, phased vertical arrays where each element is individually matched and mutual coupling is carefully managed.

Getting critically-coupled...

So if unmatched phasing lines are a 'no-no', what does that leave us with? Quite simply, we connect separate feeders to each element of our two-element beam and solve the matching, phasing and coupling requirements from the comfort of the shack!

Figure 11 illustrates the general principle. Two half-wave dipoles spaced 1/8 wavelength apart are each fed with 600 ohm open wire feeders of identical length (note that where the feeders enter the shack, you can change to the less weather-durable but more convenient 300 ohm plastic slotted feeder).

The overall length of each feeder is adjusted so that each dipole/feeder arrangement is resonant in the desired amateur band — say 14MHz. The simplest way to do this is to place a single-turn loop across the end of each feeder in the shack and check for resonance with a grid dip oscillator (GDO). The length of each feeder is then adjusted at the shack end to give a 'dip' on the GDO in the middle of the desired band, ie resonate both at 14.150MHz.

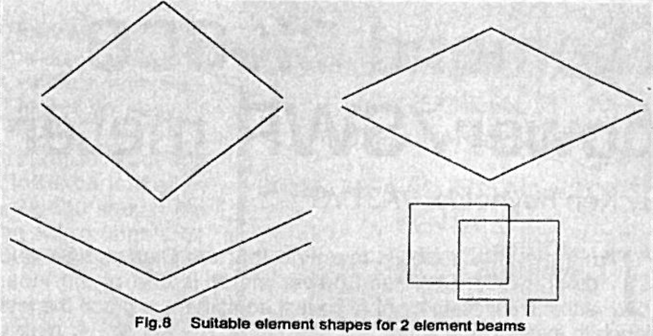

Fig.8 Suitable element shapes for 2 element beams

Fig.9 Mutually coupled elements

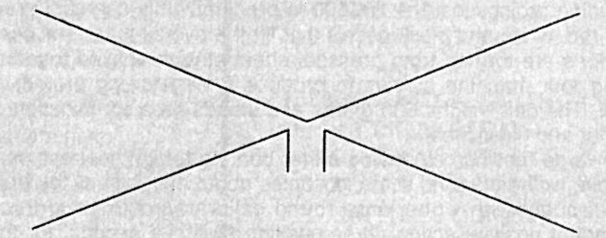

Fig.10 Traditional 2 element phased array - 'ZL Special'

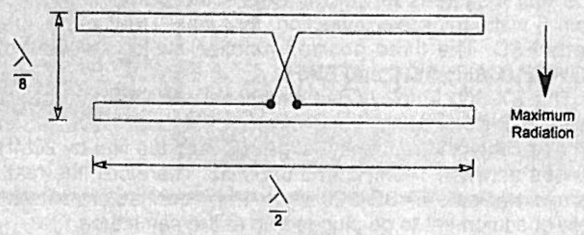

Feed at X - X with 75 ohm twin feeder

The two feeders are now connected to the switching/tuning network shown in **Figure 12**. The change-over switch simply allows the beam direction to be reversed *without* rotating the antenna.

This 'reversal of fire' is a very useful feature which also allows a quick and simple method of checking, and demonstrating, the front-to-back ratio of our two-element beam. It also enables the direction of incoming DX signals to be determined (eg either long path or short path) and to be first in the DX pile-up whilst the competition are busy rotating their beams!

VK6VZ has his fixed array based on the above principles orientated to fire east-west. With the broad beam width of a two-element array, he is able to cover Africa, Europe, the Middle East and North and Central America — on both long and short paths.

You could argue that I am trying to convert a problem into a virtue, since actually physically rotating a beam fed with open wire feeders is not for the faint hearted and some form of electrical beam direction switching may seem a necessity. However, having used two-element *rotatable* beams based upon this principle for the past 18 months, I must admit that the ability to instantaneously reverse the beam direction is still very useful and one I would certainly miss if returning to a conventional rotary beam.

Sorry, but we'll have to conclude this story next month! The rest of the diagrams will appear with next month's final instalment...

Critically coupled antennas

By Phil Harman, VK6APH/G3WXO

In last month's first part of this article, Phil explained a little of the background of using critical coupling for effective yet compact HF antennas. This month he concludes by discussing the tuning procedures involved and completes the construction notes.

Some practicalities

Let us look at some of the practicalities of the beam switching/tuning system shown in **Figure 12**. The changeover switch or relay, even at the 400 watt PEP output level, can be simply a 240V AC 5A unit. Whichever element is acting as the driven element is switched to/tuned by a standard 'Z-Match' or similar *balanced* aerial tuning unit.

The reflector is tuned using either of the methods shown in **Figure 13** (overleaf). In **Figure 13A**, a tuned circuit, resonant at the frequency of operation, is connected to the reflector feeder.

Note that since we are using balanced feeders, the variable capacitor is located at the center of the coil made up from L1 and L2 and isolated from earth. The reflector tuning can be checked by simply placing a GDO near the coil and checking for a dip at the desired frequency of operation (ie 14.150MHz) as the capacitor is varied — we need to be able to tune whichever element is acting as the reflector *at least* five per cent below our lowest operating frequency.

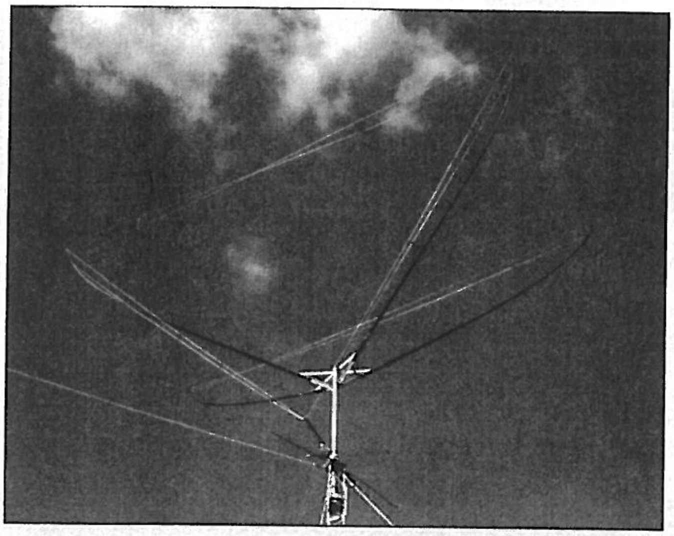

For 14MHz, a suitable inductor would comprise 8 + 8 turns of 16swg wire on a 25 mm diameter former made of plastic water pipe (ie L1 is 8 turns and L2 is 8 turns, both wound on the same former and spaced a few centimetres apart), together with a 250pf receiving type variable capacitor.

A simpler alternative is shown in **Figure 13B**. Here the inductor of the reflector tuning network of 13A is replaced with a short length of 300 ohm slotted feeder. In practice, I've found that the length of feeder can be coiled up into a single layer coil of about nine inches in diameter without any adverse effects (again a GDO can be used to check tuning range/resonance of the network). For the 14MHz band, a 2m length of 300 ohm ribbon is suitable for our reflector tuning network.

The reflector tuning network enables us to vary the relative phases of the RF currents flowing in the two elements. To achieve critical coupling, all that we have to do is to equalise the RF currents flowing in the elements.

This is relatively easily achieved if we have a simple way to measure (and thus compare) the RF currents flowing in each feeder. The RF current probe described in **Figure 14** (overleaf) is excellent for this purpose.

To tune our two-element array, the transmitter is operated at low power (about five watts is sufficient) and the Z-Match tuning our driven element is adjusted for a 1:1 SWR. Once this has been achieved, the RF current probe is held a fixed distance away from the driven element feeder — say around half an inch (judged by eye is okay) — and the reading noted.

The RF current probe is then held/placed in a similar position near the reflector feeder (ie at the same distance down the feeder from the element as the measurements were made on the driven element) and the reflector tuning capacitor adjusted for maximum reading on the probe's meter.

The readings taken on the two feeders are then compared. If the RF currents measured are not equal, they are equalised by adjusting the coupling between the 300 ohm ribbon feeders in the shack — in-phase if you need to increase the reflector current and anti-phase if it is necessary to reduce it.

This is simply achieved by overlapping part of the length of the feeders in the shack and holding them together with insulating tape. Clothes pegs are ideal to temporarily hold the feeders together whilst the exact length that needs to be overlapped is being determined.

Increasing the length of feeder that is overlapped will increase the reflector current (in-phase), whilst if the reflector current is too high, twisting the feeder, to produce anti-phase coupling, and overlapping them, will reduce it.

With the dimensions given, only a slight adjustment to equalise the RF currents should be necessary. For the majority of antennas I have constructed, either no additional coupling or a maximum of about two feet of overlapping of the feeders has been required.

It is only necessary to use the RF current probe to approximately equalise the currents, since the final (and more sensitive) adjustment of the reflector tuning/coupling is done by tuning the reflector tuning network for minimum signal off the back of the antenna. To do this, we need a signal with the same polarisation as our antenna (ie horizontally polarised) located at least three wavelengths away that will produce an S9 signal at the front of the antenna.

In practice, a local amateur radio signal located between five and 20km away, directly in the line of fire of the antenna, is ideal. I sometimes make use of broadband noise generated by a faulty 22kV power line near my QTH for adjusting the front-to-back ratio of my antennas — which must rate as the ultimate turning of a curse into a blessing!

Use the changeover switch to transpose the feeders and adjust the reflector tuning capacitor for a pronounced 'null' in the signal off the back of the antenna. The depth of the null can be further increased by adjusting the overlapping of the two feeders to obtain the deepest null.

With careful adjustment, an S9 signal can be reduced to the noise level, giving a front-to-back ratio in the order of 40 to 50dB. You won't find a conventional two-element Yagi with a front-to-back ratio that gets anywhere near this!

As mentioned earlier, the actual direction of the null off the back of the antenna can be 'steered' ±90° away from the 180° position by simply adjusting the reflector tuning capacitor. A sure indication that the antenna is working correctly, apart from the deep nulls off the rear of the antenna, is a change in SWR of the driven element as the reflector is tuned through resonance.

A very slight change in the antenna's SWR indicates undercoupling of the elements, whilst a large change (ie 1:1 to 5:1) indicates gross overcoupling. In most critical coupled antennas I have constructed, a change of SWR from 1:1 to about 2:1 as the reflector is tuned way above and below resonance is typical.

Note that these changes in SWR values are typical for the 14 and 18 MHz bands — the effect of reflector tuning on SWR being substantially less at the higher amateur frequencies.

It is interesting to observe the change in front-to-back ratio of the two-element critically-coupled beam across the amateur band for which it is designed, when the reflector tuning is left unchanged. For example, adjusting a 14MHz version for a front-to-back ratio of 30dB at 14.200MHz will result in this being reduced to 10dB, or less, at the band edges.

This is typical for *any* conventional two- or three-element conventional monoband beam where the user has no remote control of element tuning/front-to-back ratio. However, with both elements driven and remote reflector tuning, a front-to-back ratio of 30dB-plus can be achieved over the entire band, together with steering of null directions and instantaneous beam reversal.

Fig.12 Beam reversal and tuning

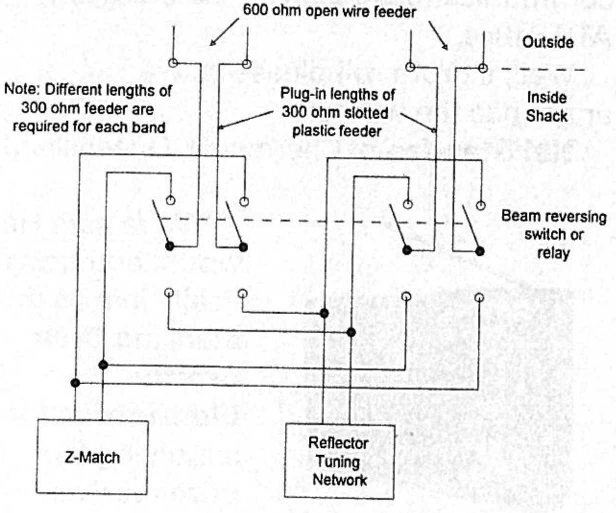

This variation in beam performance across an entire amateur band also applies to the forward gain of the antenna. Also, the forward gain of the two-element critically-coupled beam will typically vary between 5.3dBd when the reflector tuning is adjusted for maximum forward gain and 4.0dBd when tuned for maximum front-to-back ratio.

This represents another design compromise over which the owner of a conventional parasitic beam has no control. With remote-tuned critically-coupled antennas, the characteristics can be altered, from the shack, as propagation and other requirements change.

More bonuses

The effect of tuning the reflector for maximum forward gain can be observed relatively simply by monitoring a steady signal and adjusting the variable capacitor in the reflector tuning network. Varying the tuning so that the reflector is completely de-tuned will result in a drop in signal of 1.5 S-points over the level when the capacitor/reflector tuning network has been adjusted for maximum forward gain.

It is interesting to note that the antenna's gain falls off fairly slowly as the reflector is tuned below the resonant frequency of the driven element, but tuning it above the resonant frequency of the driven element — so the reflector becomes an inefficient director — results in a rapid reduction in gain of the antenna. The ability to remotely tune the reflector of the critically-coupled beam vividly enables much of the theory shown in the various antenna handbooks to be demonstrated from the comfort of your radio shack, bringing whole new insights into beam antenna operation.

After some experience with remote tuning of critically-coupled beam antennas, it becomes relatively simple to adjust them for maximum forward gain by tuning the reflector for maximum atmospheric noise on the desired frequency of operation. With the ability to instantaneously switch the direction of the antenna, a few interesting observations regarding atmospheric noise and propagation can be made.

Firstly, the level of atmospheric noise varies with beam direction. This observation has been confirmed with other amateur radio operators who are able to quickly reverse beam directions.

Secondly, the level of atmospheric noise can be used as a simple propagation indicator. This is particularly useful for determining if the long path to Europe on 20 metres is open.

On days when the path is open, there is a marked increase in atmospheric noise on the long path to Europe from Western Australia, as compared to the short path. Repeated observations over a period of a year have convinced me of the reliability of this conclusion, which may have gone unnoticed before due to the inability of the majority of beam users to instantaneously reverse their beam headings.

Tuned feeder advantages

Before closing, there is one vital concept for producing cheap, simple multi-band critically-coupled antennas we should explore — the use of open wire feeders.

For the majority of my 28 years as a licensed radio amateur, I have used 50 ohm coaxial feeders for my various beams, loops and quad antennas. Open wire feeders always appeared to me as old-fashioned, inconvenient, prone to radiate and cause TVI and EMC problems.

However, after using tuned open wire feeders for some 12 months I am convinced that only the 'inconvenient' label is correct — running a length of 50Ω coax will always be more convenient, although using 300 ohm plastic slotted feeder in the shack comes fairly high on the convenience charts. I have found no more TVI or EMC problems occur than with co-axial feeders.

Fig.13 Reflector tuning networks

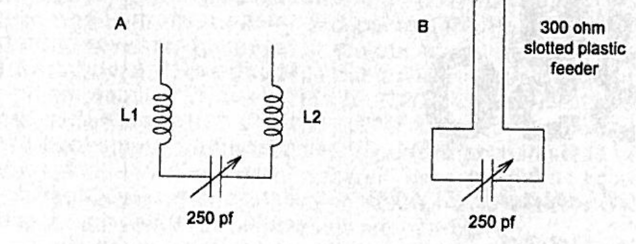

Using open wire feeders — often at very high levels of SWR — can result in simple and effective antennas covering all the HF amateur bands between 14 and 28MHz without the need for lossy 'traps' and their inherent weather-proofing problems.

Quite a convincing demonstration of the low radiation, and signal pick-up, of a well-balanced open wire feeder can be made by connecting a length of it to the output of a Z-Match ATU, where the far end of the feeder is open circuited and *not* connected to an antenna.

Tuning the Z-Match for maximum received noise on a particular frequency — say 14.150MHz — and then tuning across the HF spectrum (ie down to 2MHz and up to 30MHz) will result in only extremely strong stations being received — at a very low level! As you can see, the open wire feeder is hardly an efficient 'antenna'.

The main advantages of using tuned open wire feeders with critically-coupled HF antennas are:

***1.** Since resonance is now a function of both antenna element length and feeder length, the exact length of each element is unimportant. This is in direct contrast to a conventional parasitic beam, where adjustment accuracy in the order of a few inches is important.*

For those of you who, like me, detest working at the top of towers or ladders, and hence are never sure whether their antennas are optimally tuned, this *has* to be a significant advantage. As long as this 'approximate' practice is not taken to extremes, it means that no adjustment of element lengths is required.

Fig. 14 Current Probe

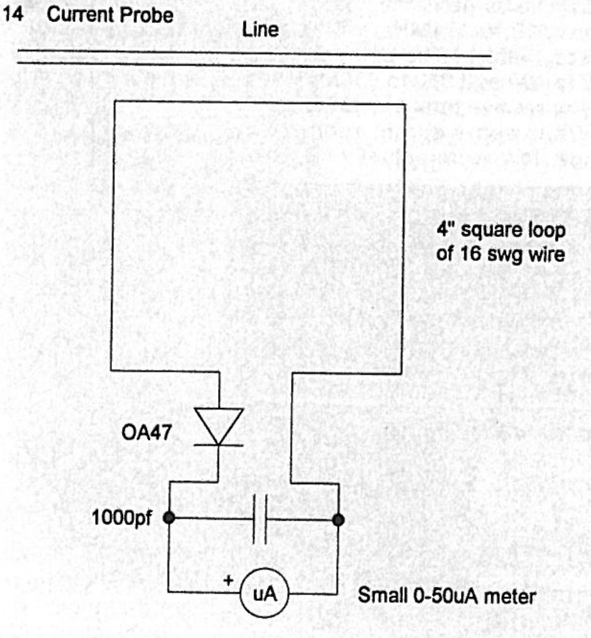

Simply making both elements and feeder lengths electrically equal simplifies beam reversal switching and allows all tuning operations to be undertaken from the relative safety of the shack. The main advantage of using full length elements (ie half-wave, full-wave) on a particular HF band is that the SWR bandwidth is increased — available gain and front-to-back ratio are not significantly affected by quite dramatic shortening in element lengths.

***2.** The ability of open wire feeders to operate at very high SWRs with minimal loss means that a single pair of elements can be used on multiple bands. For example, a two-element critically-coupled Yagi beam using 24ft elements, spaced 8ft apart, will work effectively on 14, 18 and 21MHz as long as current equalisation and reflector tuning is maintained in the shack.*

Unfortunately, due to large variations in impedance with large changes in frequency, a straight dipole element presents matching difficulties for multi-band use beyond the above limits (ie the two-element Yagi described above will not work efficiently on 24/28MHz).

However, a relatively unknown form of multiband loop, called a **Small Delta Loop** (**SDL**) by its inventor G6XN[6] is ideal for such elements and enables a pair of loops to operate effectively on all amateur bands from 10 to 28MHz. I have been using a two-element critically-coupled beam based on SDLs for the past 12 months and am delighted with its performance — for further details see *Radio and Communications* next month!

Conclusions

The use of open wire balanced feeders — with their inherent low loss at high SWR — to feed two-element arrays of critically-coupled elements can result in simple HF beam antennas that have many advantages over conventional parasitically-excited beams.

These include wide continual frequency coverage (10 to 28MHz using SDLs) without lossy 'traps', excellent gain, very high front-to-back ratios (over 30dB) and instant beam reversal.

My next article will show how to practically construct a two-element critically-coupled loop array, using SDLs and capable of operation on 10 to 28MHz.

Acknowledgments

Most of the description of critical coupling in this article is based upon the pioneering work by Les Moxon, G6XN and is explained in more detail in his book[5]. I have attempted to provide the same information as G6XN, although in a more practical manner. Les' book is highly recommended for those who would like a more detailed understanding of this exciting principle.

I would also like to thank Steve, VK6VZ for his support and encouragement during the preparation of this article. His editorial skills are a perfect complement to my inexperience in writing in non-technical language.

References

[1] Fred Caton, VK2ABQ/G3ONC, *Electronics Australia*, October 1973.

[2] *What is a Log Yagi?*, Steve Ireland, VK6VZ/G3ZZD, Amateur Radio Action, May 1995. Antenna West can be reached on (09) 279 4923.

[3] J. Sproule, VK2AGT, *Amateur Radio*, September/October 1994.

[4] *The G4ZU 'Bird Cage'*, RSGB Radio Communications Handbook, 4th Edition, page 13.67. (See also G4ZU's articles about his Bird Cage antenna, *Amateur Radio Action* 1991-92.

[5] Les Moxon, G6XN, *HF Antennas for all Locations*, Second Edition, page 78, published by the RSGB.

[6] refer [5] pages 124-126, 210-217.

Building 'the claw'

a two element critically coupled multi band beam

By Phil Harman VK6APH/G3WXO

In the November and December 1995 issues of Radio and Communications, I described the theory behind a new breed of beam antennas based upon the 'critically-coupled' principle. These antennas are fed with open wire feeder to enable multi-band operation with non-resonant elements.

In my article[1], I explained that the use of 'straight' (dipole-type) non-resonant elements in a beam limits the frequency range over which it can be used, due to difficulties with matching to the antenna's feeder. I also mentioned a new **Small Delta Loop** (**SDL**) element developed by G6XN[2] which gets around this limitation and enables a beam made up of them to operate satisfactorily on the amateur bands between 10 and 28MHz.

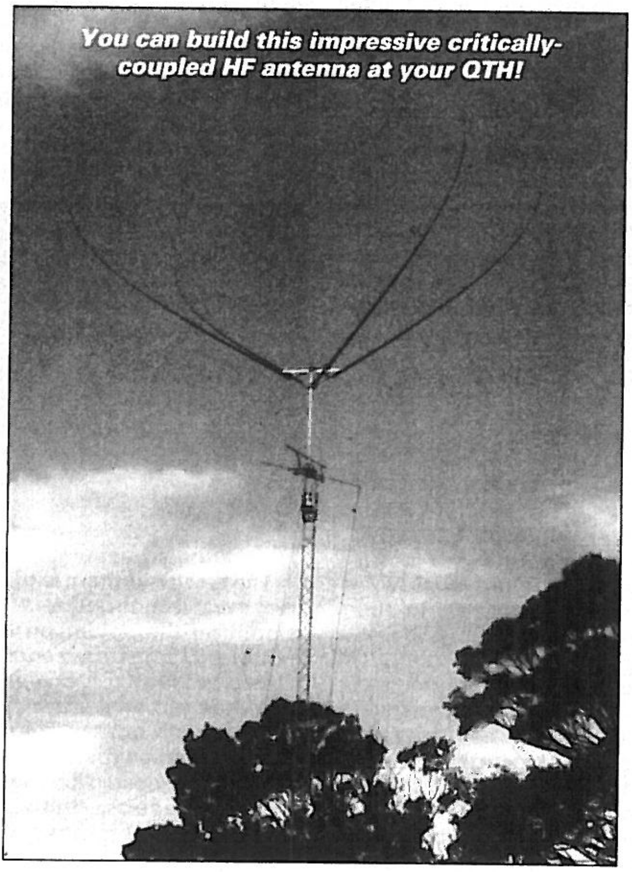

You can build this impressive critically-coupled HF antenna at your QTH!

This right-angled SDL is shown in **Figure 1** (overleaf) and has the following characteristics:

- a higher radiation resistance than any other closed loop configuration (see **Figure 2**).
- a radiation pattern that is basically maintained over a 2.8:1 frequency range (see **Figure 3**) (overleaf).

These characteristics make the SDL ideal for using as a basis for a multi-band HF beam, and it simply replaces the half-wave dipoles of the critically coupled antenna described in the previous article[1]. Since the feed method, beam reversal switching, reflector tuning and method of adjustment remain the same, the details will not be repeated here.

The two-element SDL beam, nicknamed '**the Claw**' by G6XN, shares many of the desirable characteristics of the famed cubical quad antenna. For many years, the two-element 'quad' beam has been attributed with almost magical properties, including that of a lower angle of radiation than Yagi antennas at the same height.

Extensive evaluation of quad against Yagi beams[3] in the late 1980s brought into question the belief, held by many radio amateurs, of the quad's exceptional performance at low heights. Despite the wealth of evidence against the quad in this regard, the author's long-term experience is that a two-element quad certainly outperforms a three-element HF trapped beam when mounted at the same boom height.

Les Moxon, G6XN speculates that the reason for the quad's superior performance may be due to the distant station receiving radiation from the top of the loops — which are at a greater effective height than the Yagi. If this is the case, then even better performance should be obtained by removing the lower halves of the loops and arranging for all the radiation to come from the top of the highest section of the loops (or raising the antenna!).

This idea lies at the heart of my SDL beam, based on G6XN's ideas and shown overleaf in **Figure 4**. Note that unlike the conventional two-element quad and delta loop beams, the spacing between the elements is not constant, being 10' apart at the top and tapering to 4' at the bottom.

The reason for this variation in spacing is to maintain critical coupling between the loops as the frequency is varied. On the 14MHz amateur band, the current distribution is such that a maximum occurs at the top of each loop and hence the majority of the radiation comes from the top of the loops where they are spaced 10' apart.

Thus on 14MHz, the effective height of the antenna is around 13' above the boom height. As the frequency of operation is increased, the antenna's current distribution becomes more uniform and the effective spacing between the loops reduces — as does the height advantage.

The SDL beam to be described has the same forward gain as a two-element quad and also shares the latter's other desirable attributes, such as a high front-to-back ratio, low rain static noise, quiet reception and a small turning radius.

The construction of the SDL resembles that of the top half of a spider-type quad and uses the same general construction techniques. The 'half quad' nature of the SDL also means it has half the weight and half the wind loading — and is only half as ugly (or beautiful!) as an equivalent quad.

Incidentally, whilst the antenna is referred to as a Small Delta Loop (SDL) beam, there was no deliberate intention by the author to build a 'small' antenna. In fact, one of the antennas seriously considered as my permanent HF antenna — and against which the SDL was compared — was a full-size three-element 14MHz monoband Yagi on a six metre boom.

The 'small' in the SDL's name relates to the circumference of each loop, being 0.85 wave-

...☞

Fig.1 Right Angled Small Delta Loop

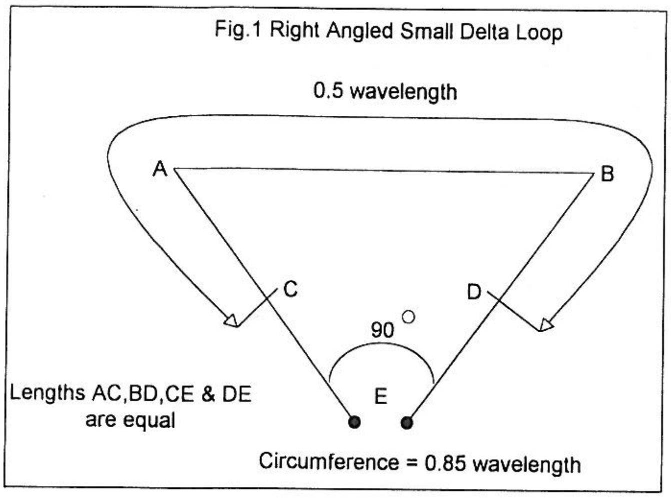

Fig.2 Variation of radiation resistance with loop size

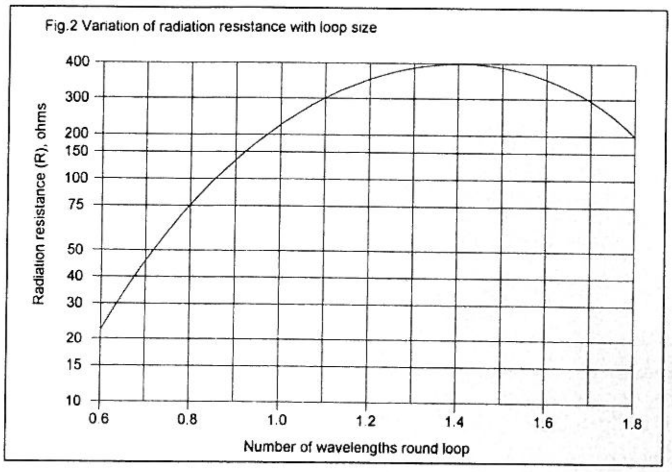

Fig.3 Variation in front/side ratio with loop size

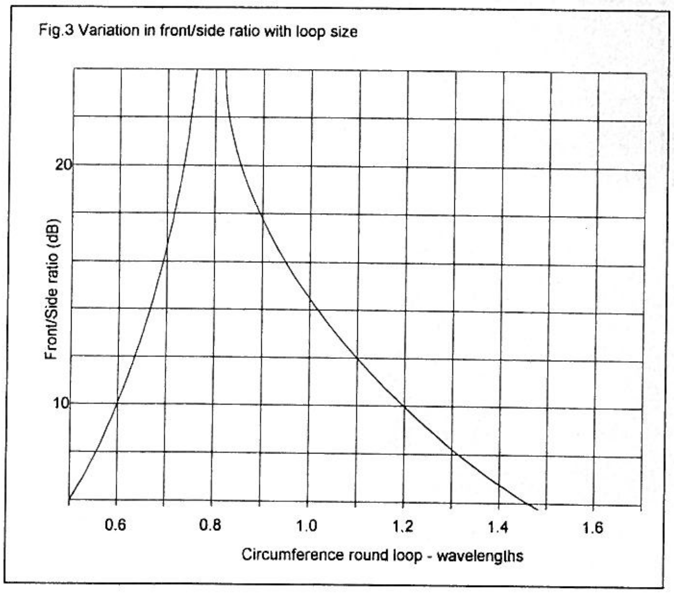

length at 20 metres, as compared to the full wavelength of a conventional delta loop. The reason for not using a full wavelength 14MHz loop is that the beam's radiation pattern would break up on 28MHz, making it a relatively poor antenna on that band.

Using a 0.85 wavelength loop has minimal impact on the forward gain of the antenna on 14MHz, although it does reduce the SWR bandwidth slightly.

Building the beam

The construction of the SDL beam is shown in **Figure 4a** (right) and follows general quad principles. Its supporting arms are constructed from four 15′ fibreglass fishing rod blanks, obtained from a local tackle shop at $60 each and manufactured by Snyder/Glass[4], part number 7/5177.

When ordering the blanks, ask the sales staff in the shop to mark the side where fishing line ferrules should be fitted. When the SDL is assembled, these sides must face each other across a loop.

The reason for this is that a fibreglass fishing rod is designed to bend mainly in one direction only — bending the rod 'backwards' to the same extent as it can be bent 'forwards' can snap it!

Other suitable materials for the supporting arms are fibreglass boat out-rigger blanks (an early smaller prototype being constructed using these). Out-rigger poles are cheaper, slightly heavier and more rigid than fishing rod blanks, but unfortunately I couldn't find any 15′ long.

Another alternative, again available from the local tackle shop, is to use bamboo fishing poles. At about $15 each, with suitable fibreglass tape wrapped round them for weather protection, these are relatively cheap and should have a useful longevity. However, in the long term, if you can afford the fishing rod blanks, they look a better investment.

The fishing rod blanks are mounted into a 'half spider', constructed of one inch 90 degree aluminium angle, as shown in **Figure 5** (to be printed next month) and various photos nearby. The blanks are held in place using stainless steel hose clips (non-stainless clips only lasted a few months at VK6APH's coastal QTH).

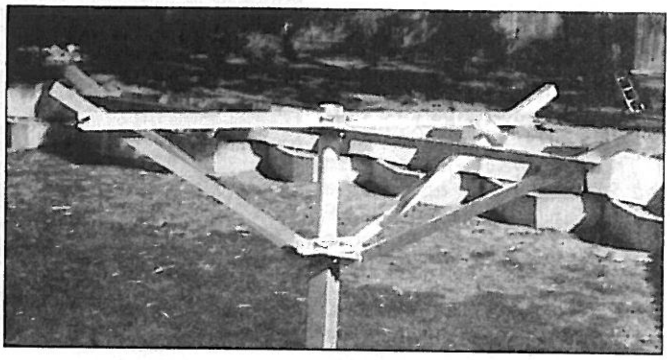

The aluminium arms of the spider are MIG-welded at the joints and connected to a 6′ aluminium extension tube (for mounting the spider on the antenna rotator/mast) using exhaust clamps and shoes. Note the clamps and shoes should be given a coat of rust-proofing paint.

Although early prototypes of the half-spider were held together with bolts, the current version was MIG-welded by the local garage for a nominal number of tinnies! Be sure to fit the lower hose clips to the spider before having it welded — if you haven't, contact me and I'll explain the slightly arduous task of taking a hose clip apart and fitting it post-welding!!

The spacing between the tops of adjacent loops is held at 10′ by means of heavy-duty nylon fishing line, fixed halfway along the fibreglass arms.

The bottom of each loop is supported by a small stub-boom, constructed from a 4′ length of 1/2″ diameter fibreglass rod. A 4″ length of 1/4″ fibreglass rod is fixed to each end of the stub-boom, so as to form a T-shape.

Drill a 1/4″ diameter hole in each end of the stub-boom, pass the T-arms through the holes and secure with them in place with Araldite. File notches at the ends of the each of the T-arms, so that the loops can be terminated on them.

It would be nice to report that this method of construction

Fig.4 SDL construction details

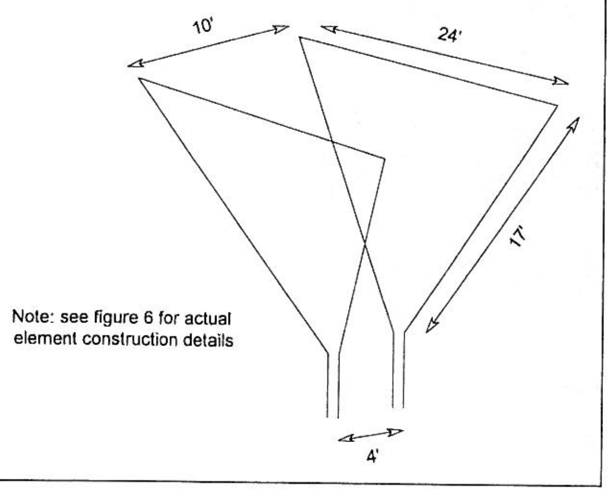

Fig.4a SDL construction details

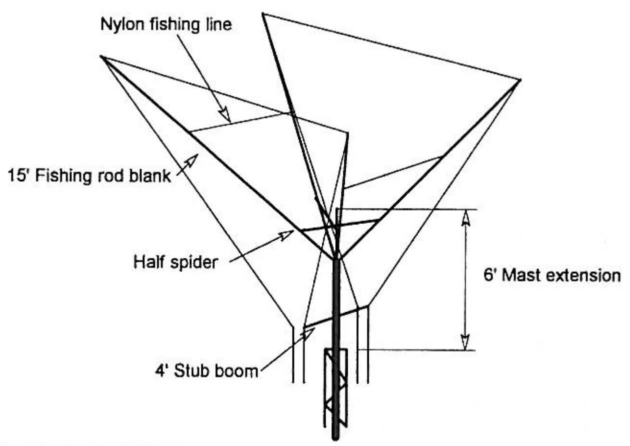

has survived the worst that Mother Nature has to offer. Unfortunately, the very severe storms in Perth during May 1994, with wind speeds exceeding those of the infamous Cyclone Alby, took their toll, with all wires being stripped from the support structure and one arm of the spider breaking away. No damage to the fibreglass arms was sustained and re-building the spider was straightforward. Inspecting the damage to the spider with my ex-aircraft designer father revealed a mechanical design flaw which was subsequently rectified and is reflected in the design shown in **Figure 5** (this picture will be printed in the next issue).

No doubt the next cyclone passing nearby will thoroughly test the modified half-spider! Readers should bear in mind that, like a conventional quad or delta loop array, after severe storm conditions the wires forming the loops of the SDL may require replacing.

Due to the lightweight construction of the SDL beam's supporting structure, the complete antenna weighs only 8kg, and a light duty rotator is quite sufficient for turning purposes. At VK6APH, a Kenpro KR400 rotator has been used for over 12 months with no problems.

Since the bulk of the antenna weight is located some 6' above the top of the rotator, a thrust bearing (mounted in the top of the tower between the rotator and the antenna) is strongly recommended since the bending moment at this point, in very high winds, is likely to exceed a light duty rotator's rating. Invest in a thrust bearing like I did... and sleep soundly!

The elements

A twin, 'double-D' shaped, wire element is used, as shown in **Figure 6** (next issue), with each element effectively being made up of two interconnected loops of wire. The double-D technique reduces the characteristic impedance of the element, lowering the SWR in the tuned feeders and increasing the SWR bandwidth on 14MHz.

The electrical 'shorts' in the sides and top section of each element prevent any undesirable circulating currents within the loops occurring.

After experimenting with various wire types and gauges for the loops, 19 SWG (1mm) enamelled copper wire was settled on as being a good compromise between strength and weight. Earlier tests with 0.8mm aluminium MIG welding wire were promising, but it was found to fracture over a period of time.

Standard plastic-covered hook-up wire of about 1.5mm diameter had sufficient strength, but it was too heavy for the narrow ends of the fishing rods and drooped unattractively.

Over time, I found the wires of the loops tended to fracture at their top corners, where an abrupt change in angle takes place. To overcome this problem, the wires at these corners are run through short lengths of plastic sprinkler tubing, which are held in place against the arms using black cable ties (black ones seem more UV-resistant than white ones!).

The use of the sprinkler tubing 'sleeves' results in a slow change of angle of the wire at the corners. No wire breakages have occurred in the last 12 months.

To make the sleeves retain the necessary angle, thread a length of string through the tube, bend the tube through 90 degrees by pulling the ends of the string towards each other, and tie the ends of string to hold the angle. Now, drop each sleeve into a saucepan of boiling water for about a minute, then remove and allow to cool before removing the string (you could try serving them with a side salad and a nice bottle of red wine!).

One of the photos nearby illustrates the method of attaching the sleeves to the SDL supporting arms.

Feeding the antenna

As explained in the previous article, the two SDL elements require feeding via equal lengths of balanced line of between 300 to 600 ohms characteristic impedance. We must construct or purchase suitable feeders before proceeding with the assembly of the antenna.

My early experiments with the SDL beam used feeders made of 300 ohm plastic ribbon of the transparent variety, with solid insulation between the two conductors. I quickly found this appears to be totally unsuited to use in the open air, since the feeder's velocity factor changes dramatically when wet or damp and, unless adequately supported, fractures when the wind blows.

As an alternative, the black slotted 300 ohm plastic ribbon feeder appeared to be much less affected by rain and wind and, having used this type with some success on a 7MHz delta loop, I decided to try this next. As a precautionary measure, every alternative web was removed from the feeder using a pair of scissors.

Although fewer problems associated with wet weather effects were experienced, the black slotted feeders were also operated at a much lower SWR than the original transparent ones. To stop the feeders from swinging in the breeze and eventually fracturing, a length of nylon cord was threaded through the webs of the feeder and used to support the feeder, prolonging its life considerably.

That's where we must leave this interesting construction project this month. Look in the next issue for the concluding details.

Building 'the claw'

a two-element critically coupled multi-band beam

Part 2

By Phil Harman VK6APH/G3WXO

Eventually, in the interests of durability, it was decided to make some 450 ohm 'open wire' feeder. This was constructed from two lengths of 16 SWG hard drawn copper wires, spaced approximately 2" apart.

The method of construction is described in most radio handbooks, but is shown in **Figure 7** for convenience.

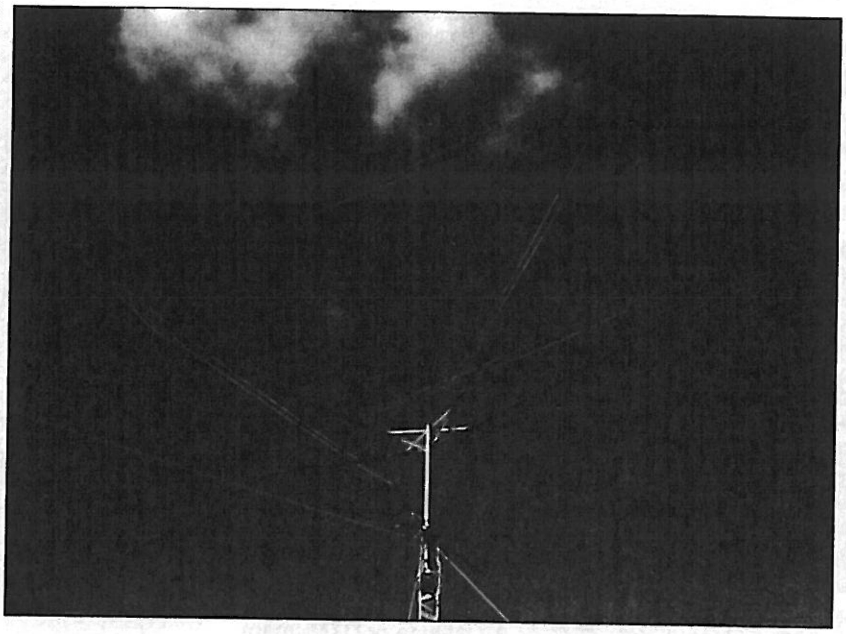

Part one of this interesting project appeared in our last (March) issue which is available from our "back order" department - telephone (03) 9 567 4200.

My first attempt at constructing open wire feeder used short lengths of black plastic sprinkler tubing as spacers.

Although this appeared to work satisfactorily, a puzzling problem developed whereby the loss in the feeders increased dramatically when operating at high SWR, during very humid weather.

Thumbing through the 'Letters' pages of an old copy of QST, I found someone who had experienced the same problem when using plastic tubing for open wire spacers.

The solution was to simply replace these with solid fibreglass spacers.

The problem apparently occurs due to condensation forming inside the tubing and 'shunting the line'.

Replacing the tubing with 1/4" solid fibreglass rod cured the problem on 18MHz and above, but losses still increased at night on 14MHz, returning to normal low-loss operation the following morning!

After much fruitless experimentation, frustration and 'assistance' from other radio amateur friends (one of whom actually suggested that the antenna was simply afraid of the dark!), I sought the advice of G6XN himself.

He suggested that, since my QTH is very close to the sea, the problem could be due to salt build-up on the surface of the open wire spacers. Since on 14MHz the feeders operate at very high SWR (>20:1), and hence high impedances, I realised losses caused by the damp salty seaside air that occurs at night could well be the cause. The sun in the morning would quickly dry out the salt and things would return to normal — until the next night!

If this diagnosis was correct, the solution was simply to lower the SWR on 14MHz by switching in a matching network when using that band, as shown in **Figure 8**.

The matching network, switched into circuit by a relay, not only lowers the SWR but also has the desirable side-effect of doubling the SWR bandwidth on the 14MHz band.

The theory behind the operation of the matching network can be found in G6XN's book *HF Antennas For All Locations*[2]. Note that, unless you have a coastal location, the problem caused by salt build-up on the open wire feeder spacers is unlikely to occur!

Another alternative for the feeders is 450 ohm slotted plastic feeder, available from some amateur radio retailers.

A short length of this is used to by-pass the rotator at VK6APH and, being constructed with single core copper conductors, appears to survive high winds without any problems.

However, one radio amateur commented that he had intermittent problems when using this type of feeder on a 160 metre antenna, attributed to fractures occurring in the conductors because of feeder movement in the wind.

Again, threading a nylon cord through the webs to support the feeder should prevent this problem.

I also suffered an intermittent fault in the short length of 450 ohm feeder used to by-pass the rotator, but this was probably self-inflicted, due to my having folded the piece of feeder for storage whilst testing an alternative antenna. For those not wishing to construct their own open wire feeder, 450 ohm slotted plastic feeder is probably the best alternative.

Note that the presence of abnormal losses in the feeders of the SDL beam can be easily identified — by a reduction in variation of driven element SWR, as the reflector is tuned way off resonance. Normally the SWR should vary between approximately 1:1 and 2:1 as the reflector tuning capacitor is varied from minimum to maximum.

A dramatic reduction of SWR variation as the capacitor is varied — down to no variation at all — is a sure indication of increased feeder losses.

VK6VZ fed his two-element 'critically coupled' quad beam with 300 ohm slotted plastic feeder for six months and suffered no noticeable effects due to weather. He lives well away from the coast and salty breezes!

Assembly

Having built a number of SDL beams, the following assembly sequence is recommended. Assuming the antenna is going on the top of a tilt-over tower, connect the stub boom to the 6' extension mast just above the thrust bearing.

Mount the half-spider at the top of the extension mast, with two spider arms parallel to the ground. Using stainless steel hose clamps, fit two fishing rod blanks to the spider arms nearest to the ground. Tie a 12' length of nylon fishing line half-way along each spider arm — these will later be used to set the distance between the tops of the loops to 10'. After first stretching the wire, run one loop of 1mm enamelled copper wire from one end of the T-bar (at the end of the stub boom), through the supporting tubes and back to the other end of the T-bar. Adjust the tension in the wire to give the approximate dimensions shown in **Figure 4** *(March issue)* and secure the wire to the other end of the T-bar. Now, run the second loop making up the element in the opposite direction.

Secure this loop to the same T-bar in a similar fashion and solder the shorting links between the loops in the locations shown. Attach the plastic spacers between the two loops using short lengths of 22 SWG wire, passing the wire through appropriately-sized holes drilled in the spacers, to hold them in place, in the fashion of making open wire feeder.

Using the antenna rotator, carefully rotate the support/spider assembly through 180 degrees. Depending upon the height of your tower above ground when tilted over, it may be necessary to raise the tower slightly, so that the ends of the support arms clear the ground whilst being rotated.

Assemble the second SDL element in a similar manner, ensuring that the size of the loops is the same as those in the previously-assembled element. Connect the ends of the fishing line to the support arms opposite, such that the distance between the tops of the two loops is 10'.

Equal lengths of 450 ohm open wire feeder, sufficient to run from the shack to the SDL antenna when it is in an elevated position, are then connected to each loop and positioned to clear the top of the tower and rotator.

Operation on all bands

The two-element SDL beam described will operate efficiently over a frequency range of 2.8:1. Using the dimensions given in this article, it will work on all the amateur bands between 10.1 and 28MHz. Whilst the gain of the SDL beam is virtually unity on 10.1MHz, the high front-to-back ratio and steerable nulls make it a very useful antenna and give it significant advantages over a simple dipole or vertical.

On the LF bands the loops form an excellent capacity hat when using the paralleled feeders as a top-loaded vertical and operated against a single tuned radial a lá G6XN[2]. This configuration has enabled numerous S9 contacts with the USA to be made on 3.5MHz whilst running only 100 watts.

Recently the same concept has been tried on 1.8MHz where DX contacts have also been made.

Performance

The SDL antenna described has been used as a beam on all amateur bands between 10.1 and 28MHz and as a vertical on 1.8, 3.5 and 7.0MHz for the past year. Unfortunately it has not been possible to compare the SDL directly/simultaneously with similar conventional beams at the VK6APH QTH, owing to a lack of space.

On 14MHz, I replaced my SDL beam with a full-size three-element monoband long-boom Yagi for a few weeks, in order to compare performances. Fortunately this evaluation occurred during a period of relatively stable band conditions.

With the Yagi at a boom height of 37' (as opposed to the top of the SDL beam at 50') the performance of the Yagi and the SDL beam appeared very similar. These results were consistent with the SDL beam having a basic gain of 5.3dBd, plus a dB or two of 'height gain' over the Yagi owing to its greater effective elevation, giving the SDL the same effective gain as its much larger rival.

Fig.5 Construction of half spider

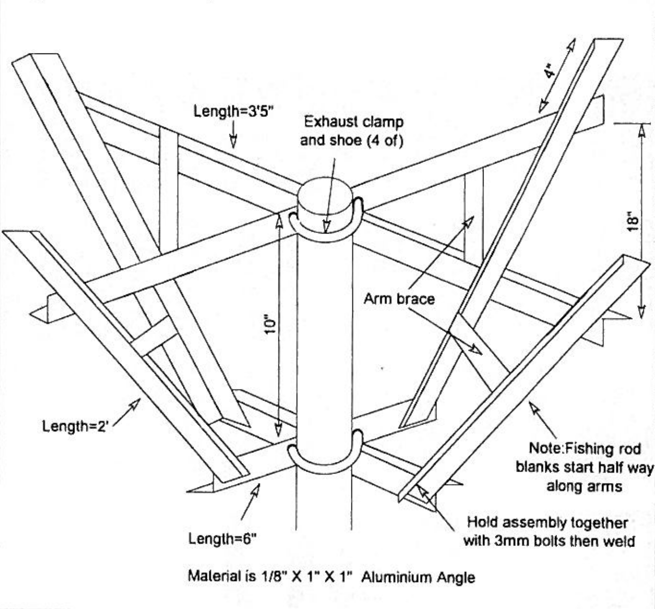

Fig.6 Element construction

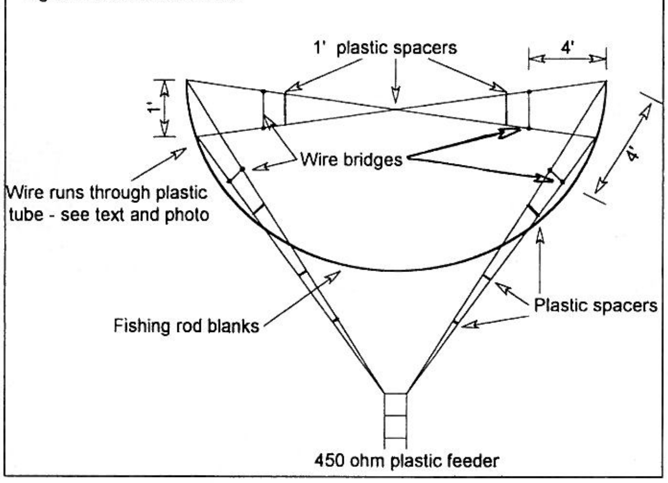

On 18, 21, 24 and 28MHz, the SDL beam's performance is exceptional, enabling VK6APH to provide many Europeans with their first VK contact on 18 and 24MHz. On the latter bands, the antenna consistently provides me with a two S-point advantage over a local station using a commercial trapped three-element 18/24 MHz beam at 37'.

On 10MHz the antenna appears to have no forward gain, but retains all the other useful characteristics of a critically-coupled antenna, eg instantaneous beam reversal, >30dB front-to-back ratio and electronically steerable nulls.

Feeding with coax

As discussed in the previous article, there are a number of problems to be overcome with using open wire feeders. For those readers who do not wish to use open wire feeders, it is possible to feed the loops with 50 ohm coaxial cable and still meet the current phase and amplitude requirements for critical coupling. The necessary balun has been developed by PAØSE for use with a DJ4VM-type Quad. It involves using air-cored 4:1 coaxial baluns[5] together with a phasing/matching network that allows independent adjustment of the current amplitude and phase to each element[6].

....☞

Fig.7 open wire feeder construction

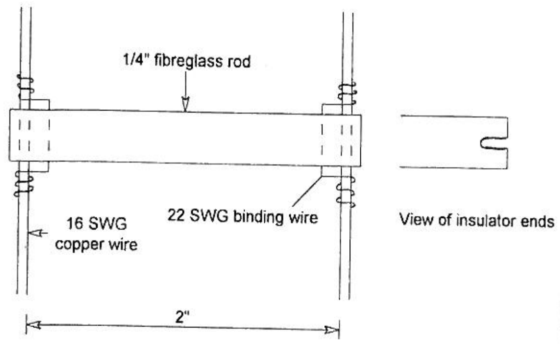

Fit spacers every 18"

Fig.8 20 metre matching network

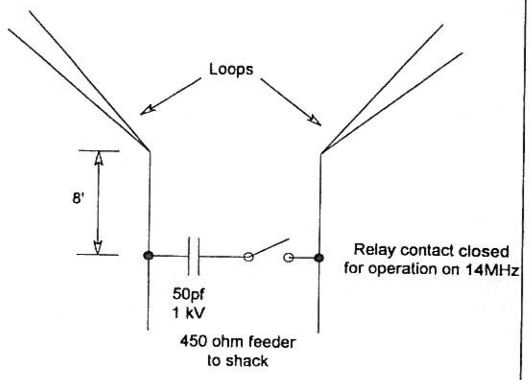

Note: fit matching network to both feeders

Building 'the claw'

a two-element critically coupled multi-band beam

Part 2 - continued

In order to evaluate the performance of the coaxial baluns and phasing/matching network, I constructed two of the former and built a 'breadboard' prototype of the latter. The SDL's open wire feeders, just as they entered the shack, were connected to the inputs of the baluns, while the balun outputs were connected into the phasing/ matching network via short lengths of coax.

PA0SE's phasing/matching system[6] was found to work equally as well as the open wire system previously used, with very deep steerable nulls on the SDL beam being obtained on all bands.

However, it was found that having to set coil taps and adjust three variable capacitors to change bands or to optimise the antenna made the coaxial matching system more inconvenient than its predecessor.

It should be noted that the coaxial matching system relies on the coaxial cables feeding the baluns operating at very high values of SWR.

Thus the losses in the coaxial cables will be higher than that of equivalent lengths of open wire feeder.

As long as the runs of coaxial cable to the baluns are kept fairly short — say 35' or less — and high-quality cable is used (ie RG213 at least), then the losses should be acceptable. Since, in my outdoor shack, there were no real problems with using open-wire feeders outside and 300 ohm plastic slotted feeder inside the shack, after a few months experimentation I returned to the simpler open wire tuning network.

However, should there ever be a need for me to use coaxial feeder on an SDL beam, I would not hesitate to return to this system.

Conclusions

The SDL-based antenna described allows operation on the 10.1, 14, 18, 21, 24 and 28MHz bands as a two-element beam, and as an efficient top-loaded vertical on 1.8, 3.5 and 7MHz. Its low cost and simple lightweight construction results in a multi-band antenna with all of the advantages of critical coupling and allows all adjustments to be made from the comfort of the shack.

This article and its predecessor only present an introduction to the concept of critical coupling, and a more detailed and mathematical-based analysis can be found in Les Moxon, G6XN's book[2].

The book is recommended reading for those desiring a deeper understanding of this exciting concept.

References

[1] Critical Coupling by Phil Harman, VK6APH, RADIO and COMMUNICATIONS - April 1996, November 1995.

[2] HF Antennas for All Locations by Les Moxon, G6XN, 2nd Edition (RSGB).

[3] (Quads V Yagis re-visited by Wayne Overbeck, N6NB, *Ham Radio*, May 1987.

[4] B & S Laminates Pty Ltd, PO Box 61, Moorooka, QLD 4105.

[5] Dick Rollema, PA0SE in 'Ideas from Abroad', Radio Communications (Radio Society of Great Britain journal), August 1992

[6] Dick Rollema, PA0SE in 'Ideas from Abroad', Radio Communications, (Radio Society of Great Britain journal), November 1993.

The D5 — a Five Band Delta Loop

By Phil Harman, VK6APH/G3WXO

Looking for a small, lightweight, directional antenna for 14 through 28 MHz? Then read on — the D5 could be just what you're looking for!

Many SWLs and amateurs are restricted in the size of HF antenna they can squeeze into their typical suburban backyards. Dreams of high towers and stacked beams go unanswered and many are restricted to fixed dipoles at low height or verticals. Whilst, with good conditions, these antennas can give acceptable results, something a little better can improve the station performance dramatically. Whilst the D5 will not compete with a large, high beam it will give a noticeable improvement over a dipole at the same mast height.

Before describing the D5 let's look at some of the alternatives and see how this antenna stacks up against the competition. For comparison purposes we'll assume we are interested in operating on all bands between 14 and 28 MHz and like to work DX from all directions of the compass.

Parallel dipoles

This consists of five dipoles each cut for a single band and the feed points commoned, as shown in **Figure 1**, overleaf. Due to coupling between individual dipoles, this arrangement can be a little tricky to adjust, and starting adjustment from the lowest frequency band and moving up in band order is a recommended method.

The interaction can be reduced by separating the wires with spacers at the common connections. 5cm is as close as you should get, and you should fan the wires out as far and as quickly as possible.

Although three bands are practical, the interaction between five dipoles is a lesson in frustration, so it's better to put 14, 18 and 21 together and 24 and 28 on a separate mast and feeder system. This will give 5-band coverage and a low SWR on each band.

Unfortunately, each dipole has a null along its wire axis, so DX in these directions is going to be difficult. Rotation is a possibility, but with two masts to look after things are starting to get out of hand — and there are simpler ways as we shall see.

To cover 20m we are going to need a horizontal span of 33ft (unless we droop the ends down which makes rotation more difficult) and as much height as possible.

Trapped dipoles

These have the advantage that the interaction between elements is eliminated, although other ills replace these. In the worst case we need eight traps, four in each dipole arm as per **Figure 2**, overleaf. These need to be correctly tuned, mechanically sound and waterproof.

Adjusting the length of the wires between traps is critical, and this time we start at the highest band and work downwards. Since the traps are not perfect we end up with lower performance on 20m since we have the loss of eight traps in series to contend with. On the plus side the length of the antenna is reduced due to the loading effect of the traps. On the negative side the weight of eight traps needs to be supported and wind loading considered.

To be able to rotate this configuration we are going to have to make the element out of aluminium tubing. This increases the weight and wind loading and reduces the chances of us using a lightweight mast and a few more feet of height which is so important on 20m.

Although trapped dipole designs are available which reduce the number of traps to four, the radiation pattern on each band then changes making rotation almost essential for all-round DX coverage.

The D5 is a very low-profile antenna! This one's at the QTH of Fred, VK6GE.

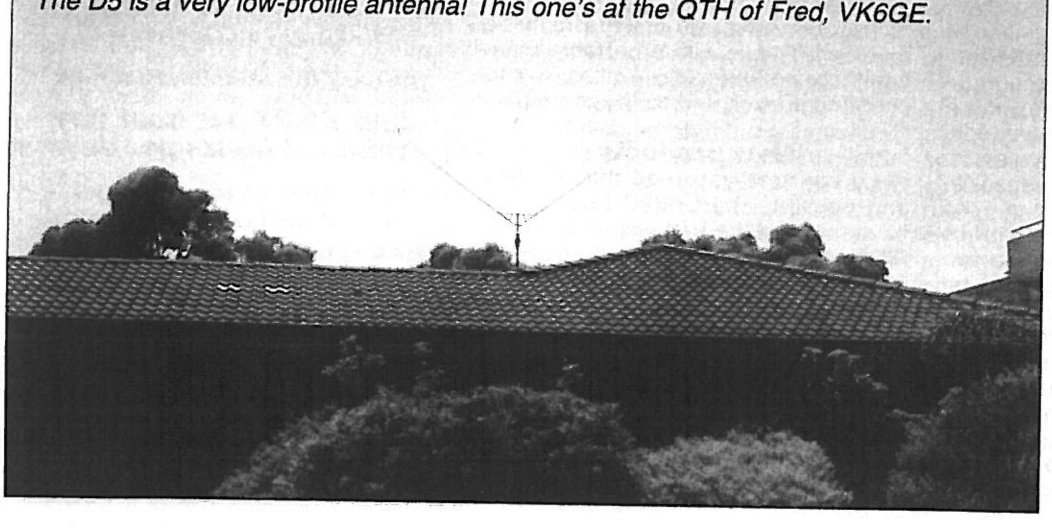

The G5RV

Since we are considering 14 through 28 MHz, a 'half-size' G5RV is worthy of consideration. See the design details overleaf in **Figure 3**. This has a dipole top of 51ft, and can be either fed with 300 ohm twin feeder all the way to the shack or a balun placed at the 15ft point and 75 ohm coax run into the shack. Even so, an ATU will be required to achieve a low SWR on all bands.

With a 51ft top, this antenna will give good performance on 40m also so, to keep size to a minimum we can reduce the top further to, say 30ft. Even so, we *still* have a fairly long element which must be rotated for all-round DX coverage since nulls appear in the polar diagram as we move higher in frequency.

Single-element Quad

This consists of five nested quad loops on the same spreaders as per **Figure 4**, over. The polar diagram of such an antenna is constant on each band, being a figure of eight broadside to the plane of the loop. We can common all the loops together at the feed point, and use a single balun and a single feeder.

Despite a relatively high SWR — approximately 2.5:1 using 50 ohm coax — we have a useful antenna with a horizontal span of only 18ft. We also have some 172 feet of wire that has to be supported and, as we shall see shortly, two unnecessary spreaders. On any particular band only one loop is working; the other loops are not doing anything to help and it irks me to think that all that wire is going to waste! All they are doing is increasing the wind loading and weight.

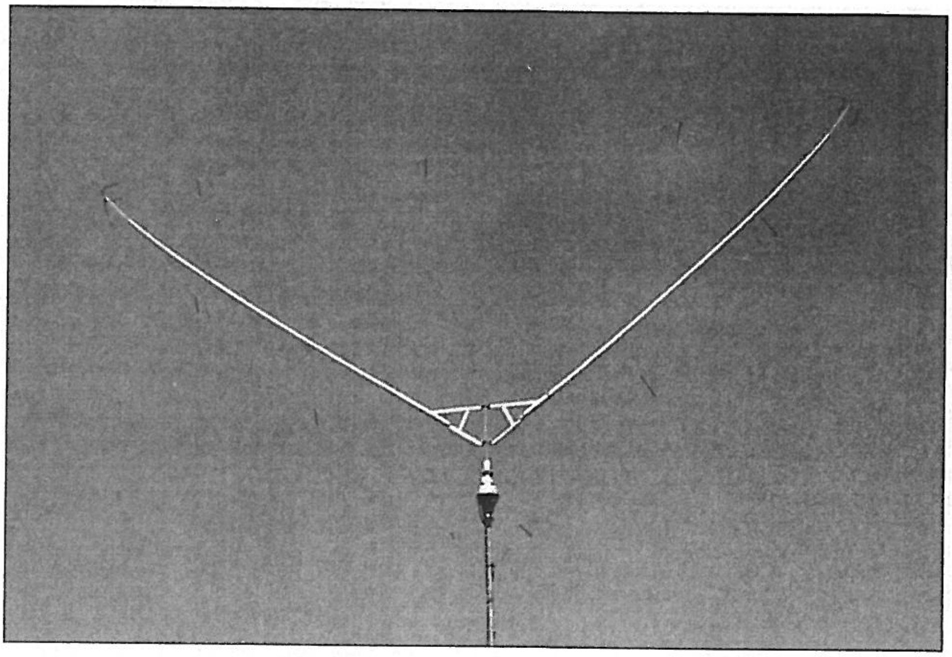

For a horizontal antenna, height above ground is very important for good DX performance, particularly on 20m and 17m. With the Quad loop we have a structure that extends some 8ft 6in above the supporting mast. Unfortunately this 'mast extension' does not mean the antenna is actually higher by this amount. In fact the electrical height of the quad loop is at its geometric centre — some 8ft 6in lower.

The D5

Okay, enough of knocking the opposition — let's get to the meat of the article! The D5 has the following advantages over the antennas already considered:

- No tuning required — it's broadbanded from 14 to 28 MHz

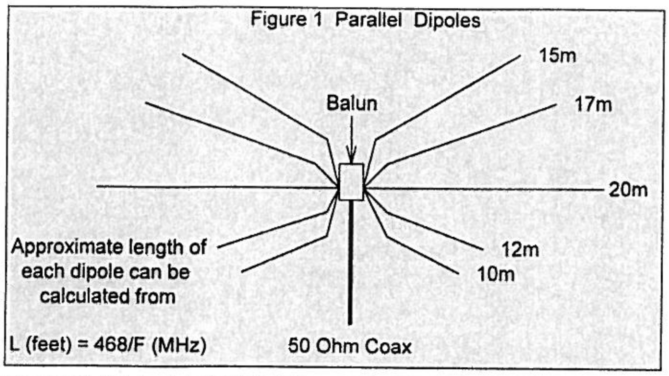

Figure 1 Parallel Dipoles

Approximate length of each dipole can be calculated from

L (feet) = 468/F (MHz)

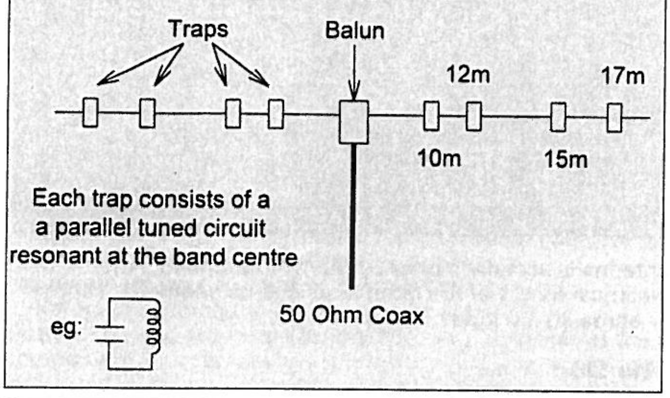

Figure 2 Trapped Dipole

Each trap consists of a a parallel tuned circuit resonant at the band centre

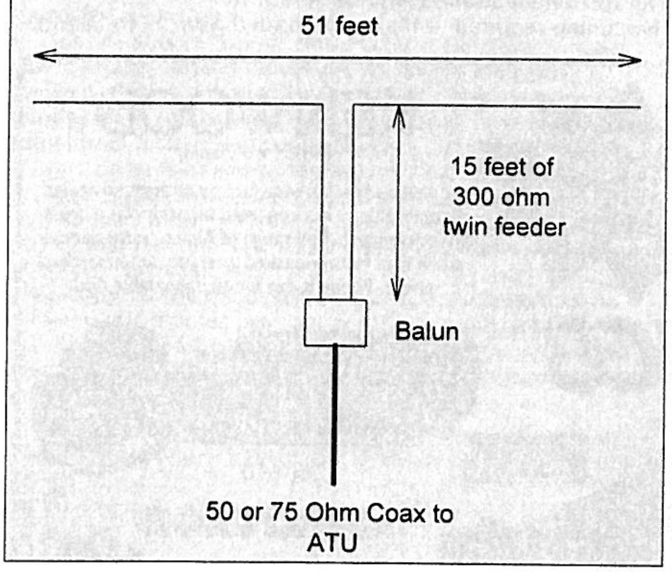

Figure 3 1/2 Size G5RV

- No stubs or traps to adjust
- A direction pattern that remains sensibly the same on each band
- The effective height is some 10ft above the height of the mast
- Simple, lightweight construction
- Small horizontal span — 21ft maximum
- *All* the wire is used on every band — no freeloaders!

Unfortunately, there is no such thing as a free lunch and, like the G5RV, we need to feed the antenna with 300 ohm feeder and use an ATU in the shack.

Before looking at the construction of the D5 lets look at how it works:

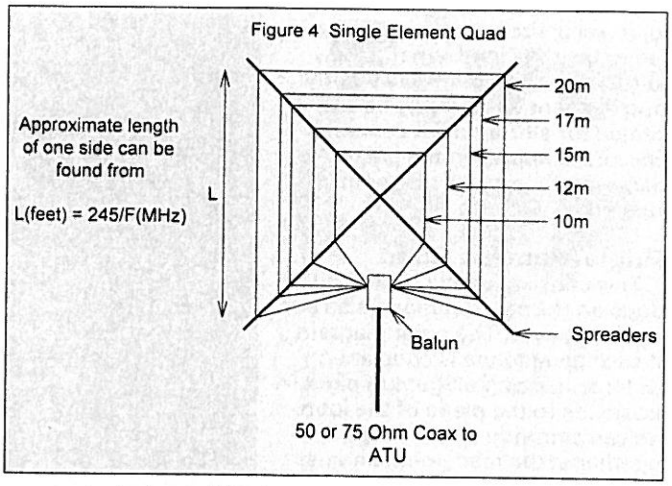

Figure 4 Single Element Quad

Approximate length of one side can be found from

L(feet) = 245/F(MHz)

We are generally comfortable with the idea of characteristic impedance, *Zo*, when considering antenna feeders. Values of 300, 450 and 600 ohms are common for open wire balanced feeder and 50 and 75 ohms for coax. We also know that connecting a resistive load equal to the *Zo* of the feeder results in a 1:1 SWR on the feeder eg connecting a 50 ohm load to the end of a 50 ohm coax gives a 1:1 SWR on the coax.

What's not so well known is that antennas have a *Zo* as well which is largely dependant upon the diameter of the wire used in its construction and the frequency of operation. For example a 20m dipole constructed of 12SWG wire will have a *Zo* of 1000 ohms whilst an 80m dipole using the same wire will have a *Zo* of 1500 ohms.

If we could make an antenna that had a *Zo*, over a wide band, equal to its feeder *Zo* then the feeder SWR would remain relatively constant over the band. This is because the feeder thinks that the antenna is simply a further extension of itself — like terminating it in its *Zo*. Given a *Zo* of 1000 ohms for the previous 20m dipole we need to bring this down to a lower value suitable for matching to standard feeder values.

The way to do this is to increases the diameter of the wire, and with 16-inch diameter wire we can get the *Zo* down to 300 ohms. The 'fat' diameter of the wire reduces the *Zo* and also increases the bandwidth. Unfortunately such diameter wire over 33ft is hardly a practical antenna in the spirit of what we are trying to achieve!

Fortunately there is a simple practical alternative. Rather than making the dipole arms out of large diameter wire we can make a 'cage' or 'skeleton' out of a number of thinner wires in parallel and spaced the diameter of the larger wire. This is the manner in which commercial 'cage' dipoles are constructed. See **Figure 5**.

It turns our that we can get away with only three or four wires and still get a good approximation of a 'fat' dipole. If we are willing to put up with a higher SWR on 14 MHz we can reduce the number of wires to just two.

Since, like the G5RV, we are going to use 300 ohm feeder and a balanced ATU, then an SWR of say 5:1 at 14 MHz will have insignificant effect on performance (although most modern solid-state transceivers will baulk at it — that ATU is *vital*!). On the higher bands the approximation to a 'fat' dipole is better, the SWR lower, and results in lower losses in the 300 ohm feeder.

So now we have a broad band dipole with an SWR that results in acceptably low feeder losses. If cut for 20m, the dipole will have the usual 'figure of 8' polar diagram.

Unfortunately, as we go higher in frequency, all kinds of nulls and lobes appear which changes the polar diagram and would require the antenna to be rotated to maintain the same geographic coverage on each band. Again, there is a simple solution to this problem: we fold the dipole to form a closed loop. A square or diamond shape helps considerably, but the pattern starts to break up on the second harmonic of

Figure 5 Cage Dipole

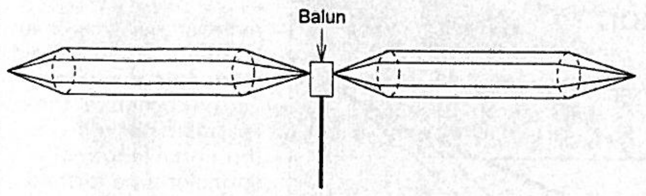

the lowest design frequency (ie 28MHz for a 14MHz fundamental).

An equilateral triangle starts to look better, but loses its front-to-side attenuation as we move higher in frequency. Side attenuation is a useful property if we would like to rotate the antenna to null out QRM and QRN at right angles to the direction of interest.

The best solution is a right-angled triangle, in a configuration better known as a 90 degree Delta Loop. I've extolled the virtues of this shape in a previous article[1], an opinion shared with G6XN in his book on HF antennas[2]. Amongst the desirable features of this shape is that fact that the effective height of the antenna on 20m is just below the top horizontal wires. This gives an additional extension of some 10ft above the top of the mast and improves the DX performance of the antenna on the lower bands.

Construction of the D5

Having decided upon the optimum shape for the antenna we now turn to construction. The general form of the antenna is shown in **Figure 6**. With a 21ft top section and 15ft sides we approximate a right angle triangle, the parallel wires making up the 'fat' elements being spaced 10 inches apart.

For a fixed direction — say firing short/long path Europe — hanging the loops between two trees or other supports would suffice and, as always, the higher the better.

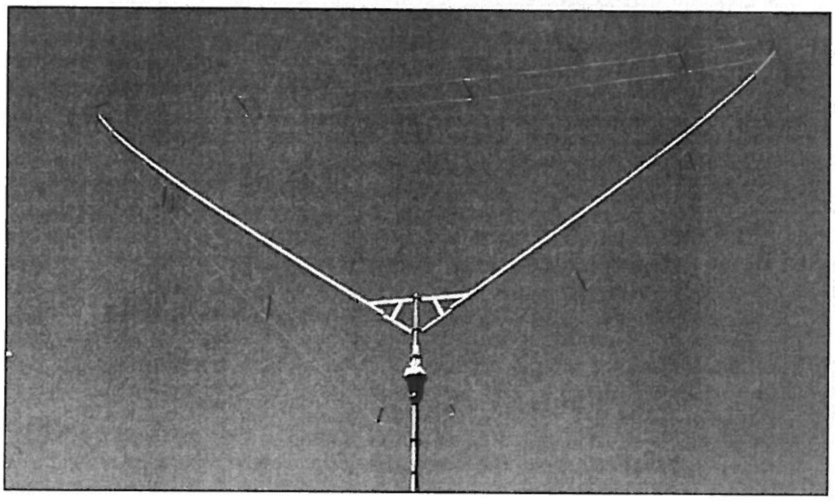

Figure 6 D5 Dimensions

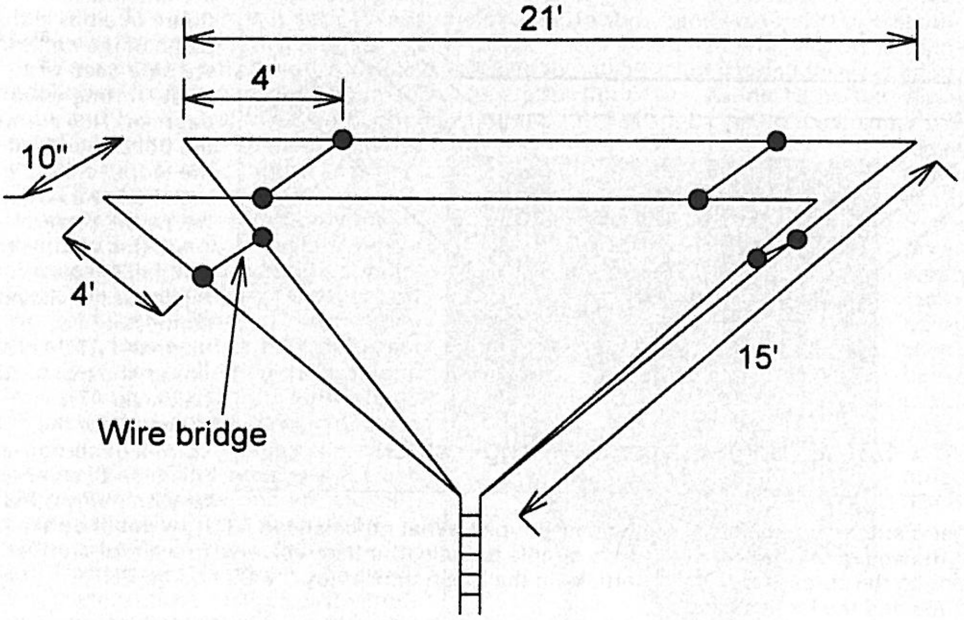

If you want to mount the antenna on a mast or tower then some form of mechanical assembly incorporating spreaders is required. Having built a number of these antennas over the years my first choice for spreaders would be fibreglass boat outriggers. These are strong and light weight but, since they are normally only available in 11ft lengths, they need a 1ft extension in the form of a length of quarter-inch fibreglass rod Araldited into the ends.

Figure 7 and the photographs shows the 5D built by Fred, VK6GE, who used 11in outriggers with an additional 1in extension. An overall spreader length of 12ft is fine, although if available use longer lengths since the height of the antenna above the rotator is reduced. My next choice would be fishing rod blanks, 15ft ones with the tips cut off move around a bit in a strong wind but have survived a number of years without mishap. Lastly bamboo poles, wrap these in electrical tape and if possible give them a thin coating of fibreglass — don't expect them to last more that a few years though in an exposed location.

To mount the spreaders to the mast I used a bracket made from 1in section aluminium 90 degree angle stock. The dimensions shown in **Figure 8** are suitable for 11ft spreaders. The simplest way to get the correct dimension for the bracket is to lay the arms on a flat surface and connect the two tips of the spreaders together with a 22ft length of string. Since this is 1ft longer than needed it ensures that the top wires are under some tension when installed. Cut the aluminium to length, drill it then fit 4mm bolts through the holes. The spreaders can be temporally held in place with electrical tape.

Adjust the dimensions until the string is held taut and then tighten the bolts. Fred fitted a couple of

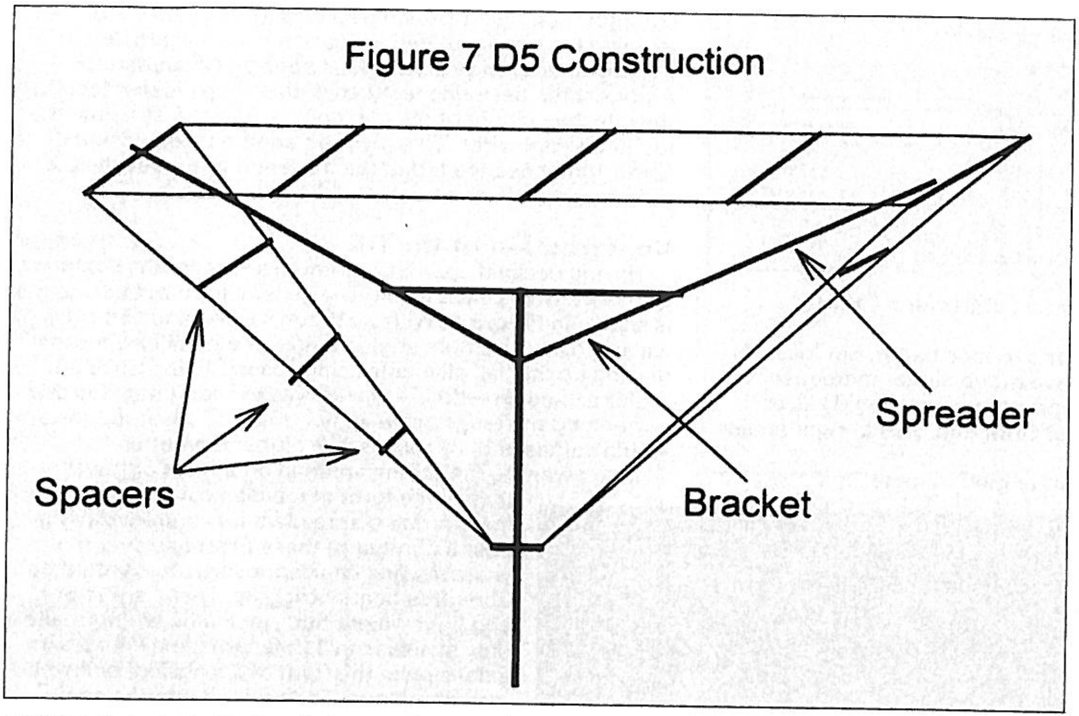
Figure 7 D5 Construction

additional struts to his bracket as can be seen in the photo; these can be fitted at this stage. Bolts seem to be fine to hold the bracket together, I've also used pop rivets and even had one welded by the local garage.

Before final assembly be sure to add a couple of stainless steel hose clips on the sloping arms. These will be used to secure the spreaders to the bracket. Once assembled, the aluminium can be drilled to take two U-bolts that will hold it to the mast. Use stainless steel if possible, otherwise exhaust clamps (with saddles) given a coat of rust inhibiter have a useful life.

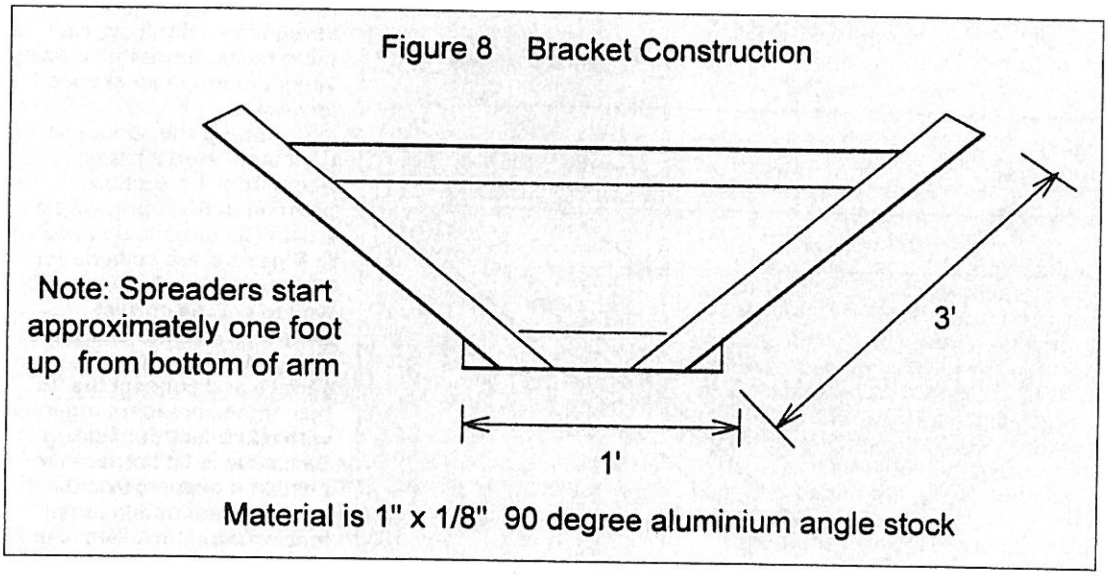
Figure 8 Bracket Construction

Note: Spreaders start approximately one foot up from bottom of arm

Material is 1" x 1/8" 90 degree aluminium angle stock

For the element, 18SWG or larger diameter enamelled copy wire is fine. Measure the length needed off the reel and stretch it tightly before attaching to the spreaders. This prevents the wire stretching over time and the loops taking on an unsightly sag.

I've also tried plastic-covered hook-up wire, but this proved too heavy and also got attacked by birds. To keep the wires apart I used 10in lengths of 6mm diameter black plastic sprinkler tubes — use black UV resistant wire ties in an X configuration to hold them onto the wires.

The corners of the loops are passed through a length of sprinkler tube formed in the shape of a C and held onto a 12in length of quarter-inch fibreglass rod also with cable ties. These rods are themselves fixed to the spreaders using cable ties in an X shape.

Note that the loops are shorted together with a wire link in four places; these prevent currents flowing in the individual loops which with the high Qs involved could be most unhelpful.

A short length of plastic sheet to terminate the elements completes the construction and provides a convenient termination point for the 300 ohm feeder. The best type of feeder to use is the black slotted variety. You can cut your own slots in solid black feeder using a leather punch if you can't find a suitable slotted brand — avoid the clear plastic type like the plague, it rots quickly with UV exposure and changes its velocity factor alarmingly in wet weather.

If you would like to rotate the antenna a light duty VHF model will suffice. As you can see from the photo, the rotator can be fitted inside the delta loop which reduces the height of the pole above the rotator. Since the pattern of the antenna is a figure of eight in the plane of the antenna, we only need to rotate through 180 degrees. This allows the bottom ends of the loops to be attached to the mast below the rotator.

All that's left is to run the 300 ohm feeder to the shack, connect it to a balanced ATU and fire up the rig. A truly balanced ATU is essential for the correct operation of this type of antenna as with many other balanced types. What no balanced ATU! — well they are very simple to build, but that will have to wait for another article. In the mean time enjoy the D5 and gd DX!

[1] *Building 'the Claw'*, Phil Harman, VK6APH/G3WXO, Radio and Communications, March 1996

[2] Les Moxon, G6XN, *HF Antennas for all locations*, Second Edition, published by the RSGB.

A Coax Feed For The 'D5' Delta Loop

By Phil Harman VK6APH/VE2

Interested in building the D5 delta loop but put off by the use of 300 ohm feeder? Well, perhaps a coax feed system would change your mind!

In a recent article I described a five-band Delta Loop antenna called the D5[1]. Fed with 300 ohm balanced feeder, and using a balanced ATU in the shack, this gave a low SWR over the range 14 to 28MHz.

From the number of on-air discussions, telephone calls and E-mail received, it would appear that the D5 has created a lot of interest. There seems to be a big demand for a small, lightweight, directional antenna that performs well on the main DX bands.

Despite the bouquets, a number of potential constructors were put off by the need for 300 ohm twin feeder and a balanced ATU. For some reason, twin feeder has undeservedly earned the reputation of causing TVI, BCI, EMI etc. This is totally unfounded, since properly-balanced twin feeder will actually radiate less than poorly-matched coax.

However, old reputations are hard to shake off and, despite the higher cost, coax is a lot more attractive to many potential constructors. Wishing to make the D5 appealing to as many constructors as possible I set about designing a matching system that would give a good match to 50 ohm coax over the 20 to 10m bands.

This turned out to be a much more difficult task than I had expected! Even with the assistance of the legendry antenna expert Les Moxon, G6XN, I needed to resort to switched inductors on two bands. Even so, the resulting matching is cheap and simple to build.

Figure 1 *Variation of D5 Z with frequency*

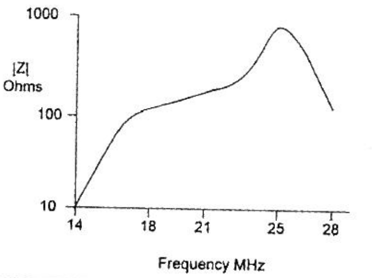

Figure 2 *4:1 balun construction*

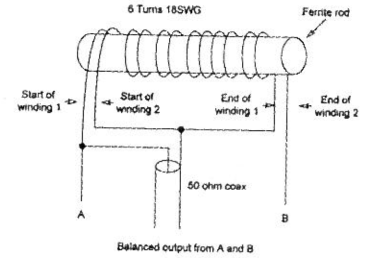

Figure 3 *Winding T2-200 core*

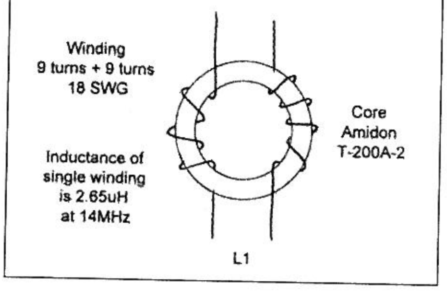

The matching problem

Before looking at the solution, let's take a closer look at the problem. The impedance, Z, looking into the feed point of the D5, varies with frequency as shown in Figure 1. As can be seen, the variation in Z is greater than 10:1 over the 20 to 10m bands.

Such a large variation in Z would result in a similar variation in SWR. In general, an SWR of >3:1 , in coax cable, should be avoided since feeder loss increases rapidly above this value, particularly as the frequency increases. (Note: SWR values much greater than this can be used with twin feeder with acceptable losses — hence my selection of this feed method for the original D5).

Some of the bands are easier to match than others, so let's start with these. On 18 and 21 MHz the Z is close to 200 ohms. Thus to match on these bands we can simply use a 4:1 balun. This will convert the 200 ohms Z of the D5 to 50 ohms.

Whilst a commercial balun can be used, cheap and simple baluns can be built using a design by Les Moxon, G6XN. Les' instructions are wonderfully simple: "Take two 10" lengths of 18 SWG wire and twist them tightly together, wind them onto any odd bit of ferrite rod that happens to be laying around and connect them as shown", Figure 2.

Suitable ferrite rods (194mm long by 9mm diameter) can be obtained for around $5 from Dick Smith Electronics (part no. R-5105). One rod should be enough to make three G6XN-type baluns and will handle 400W pep without getting hot and provide excellent balance over the range 14 to 30MHz.

The way to cut the ferrite rod into three pieces is to gently file a notch all the way round the rod at the point you wish to break it. Hold the rod in your hands, one either side of the notch, and simply snap it in two.

If it won't break, the notch is not deep enough, so file it deeper and try again. Do not try to saw through the rod or fix one end in a vice whilst snapping it — you'll end up with lots of useless bits of ferrite!

Now let's look at the 20m matching problem. On this band the circumference of the D5 is less than a wavelength (which is approximately 66 feet at 14MHz) and the feed Z will therefore look like a resistor in series with a capacitor. Since this resistance is close to 100 ohms, if we can get rid of the capacitance we can obtain a 2:1 SWR into 50 ohms.

The capacitance can be tuned out by placing a suitable inductance in series with the feed point. As we are working with a balanced antenna we need to put an inductor in series with each side of the D5's loops.

Since both of these inductors can be wound on the same toroidal core this is no great inconvenience. For a 400w pep power level an Amidon T-200A-2 toroidal core[2] is suitable and runs cool even at full power output. The way to wind the inductor is shown in Figure 3, and you should note that both windings are wound in the same direction.

Since the input to the inductors is balanced, we need to use a balun to enable us to connect 50 ohm coax to feed the antenna. We could use either a 1:1 or 4:1 balun since both would give a 2:1 SWR into 50 ohms.

As it happens, we already have a 4:1 balun that's needed on 18 and 21MHz, so we can use that. All that's required is that we short out the 20m matching inductors when we are operating on the other bands; this we can simply do with a pair of relay contacts.

As long as you don't switch the relay contacts with RF present, we can get away with a low cost relay intended for

DC operation, rather than an expensive RF type. I've used 10A open frame relays which have proven totally reliable over the years. These are sold by RS Components as part number 346-946.

For those who may be concerned at the long-term reliability of antenna-mounted relays, all I can say is in comparison to the reliability and replacement cost of a rotator, the relay wins hands down every time!

Okay, so we can now cover 20/17/15/10m with a sufficiently good match to 50 ohm cable to ensure minimal loss in the coax feed and the 'in-rig', or in shack, ATU can reduce it to 1:1.

Murphy on our side!

Now for the tough one — 12m. On 12m the D5 loop is at is full wave resonance and therefore reaches its maximum Z value of 800 ohms. After trying various odd ratio baluns without success I settled for a simple L matching network, shown in Figure 4. Here's how it works:

In theory, on 12m the 800 ohms of the D5 loop should be reduced to 200 ohms by the 4:1 balun. Unfortunately, in practice, this is only approximately true since operating a balun at such a high Z means that stray capacitance and winding leakage inductance starts to have effect.

However, it turns out that we can actually use these stray capacitances to our advantage. Doing the sums for the L and C of the L matching network gives 0.633µH for the inductor and 27 pf for the capacitor.

Finding a suitable capacitor that will handle 400w is not easy, but if you look at Figure 5 you will see we don't need one. "What, no capacitor!" I hear you say. Well, as luck would have it, the 4:1 balun has an input capacitance of about 27pf at 25MHz.

Not being used to having Murphy actually on my side, I wound half a dozen 4:1 baluns on odd bits of ferrite and different wire gauges and all gave similar values, so I'm confident that it is reproducible. Our matching network for 12m then becomes a simple inductor in series with the coax feeder.

Since this inductor is not required on the other bands, we can short it out with a relay contact when not needed. This time we are operating at lower voltage levels and a 5A sealed relay, Altronics part # S4202, is quite suitable, although again don't switch the relay whist transmitting...

Figure 4 *L matching network*

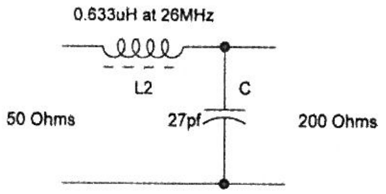

L is 11 turns of
22 SWG wire on
Amidon T-106-6 core

Figure 5 *Final matching network*

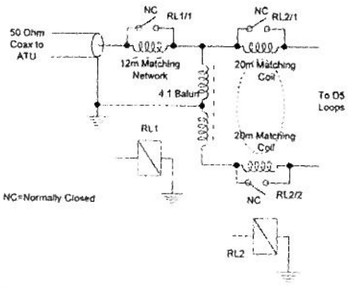

Figure 6 *Use of coax to power relays*

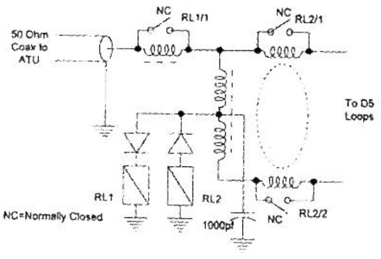

Figure 7 *Relay switching*

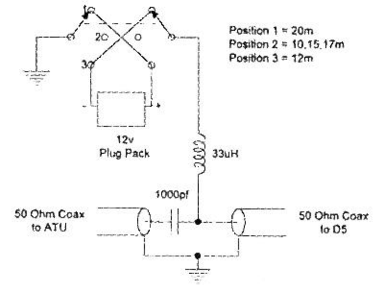

Relay Switching

Referring to Figure 5, we can see that the matching network consists of a 4:1 balun, a balanced inductor, a series inductor and two relays. We also need to feed 12 volts DC to the relays.

We could do this by sharing the outer sheath of the coax as a common ground and using a separate twin-wire cable to power the relays, as per Figure 5.

However, there is a more elegant way that doesn't require a separate cable to operate the relays. Since the coax is only being used at RF frequencies we can also carry the 12v DC along the same cable, as long as we separate the RF from the DC.

This is simply done with an RF choke, which we already have in the shape of one winding of the 4:1 balun. Figure 6 shows how this trick is performed, and by adding two 1N4002 diodes, as we reverse the polarity of the 12 volts DC we can operate either relay.

At the shack end we need a source of 12 volts DC (a standard unregulated plug pack works fine here), a 33µH RF choke (high power transmitting type) and a three-position switch. The circuit for this is shown in Figure 7.

In switch position 1 relay 1 is activated and the 12m matching inductor is in circuit. At position 2 neither relay operates so we can operate on 17, 15 and 10m. In position 3 relay 2 is activated which switches in the 20m matching network.

Construction and Tuning

At the other end of the coax the entire matching network should be fitted into a suitable waterproof container and mounted at the feed point of the D5. Leave a small hole in the enclose to prevent the build up of condensation — cover the hole with a small piece of fly screen to keep 'creepy crawlies' out.

With the dimensions previously given for the D5, and due to the broadband nature of the antenna, there should be no need to make any adjustments to the matching networks.

As long as the auto ATU in your rig, or external ATU, will allow a 1:1 match to be obtained, there is little to be gained in adjusting for the ultimate low SWR. For the purists, you can alter the spacing between turns on L1 to ensure the antenna is resonant at 14.150 MHz, and likewise adjust the turn spacing on L2 for lowest SWR at 24.950 MHz.

You can also reduce the SWR on 10m by adjusting L2 for lowest SWR mid way between the 12 and 10m bands and leave the inductor in circuit on both bands. For the absolute perfectionist, use separate L matching networks on 12 and 10m.

Conclusions

So there you have it, a good match to 50 ohm coax from 14 to 28 MHz for the D5. Hmmm... looking at all those components perhaps there's a lot to be said for good old 300 ohm twin feed after all!

1Radio & Communications – 'Antennas – Build the 'D5' Delta Loop' July 1998.

2Amidon cores can be obtained from the following stockists: Assoc TV Services, Hobart; Truscotts Electronic World, Melbourne and Mildura; Alpha Tango Products, Perth; Haven Electronics, Nowra; and WIA Equipment Supplies, Adelaide.